G-INS-M12-M68L-PEPDS-LG - Cable gland

1424513

https://www.phoenixcontact.com/us/products/1424513

Please be informed that the data shown in this PDF document is generated from our online catalog. Please find the complete data in the user documentation. Our general terms of use for downloads are valid.



Cable gland, material for screw connection: PA, application: Standard, external cable diameter 3 mm ... 7 mm, shielding: no, connecting thread: M12 x 1.5, color: lightgray RAL 7035

Commercial data

Item number	1424513
Packing unit	10 pc
Minimum order quantity	10 pc
Sales key	BF68
Product key	AF7DCX
GTIN	4055626374185
Weight per piece (including packing)	7.19 g
Weight per piece (excluding packing)	7.19 g
Customs tariff number	39269097
Country of origin	DE

Technical data

Mounting

Assembly note	1) Mount screw connection support in the housing using the correct torque 2) Insert cable 3) Tighten union nut using the correct torque

Product properties

Product type	Cable screw gland
Application	Standard
No. of conductors	1
Manufacturer	WISKA
Manufacturer Designation	ESKV-L 12
Shielded	no
Execution of the strain relief	A

Ex data

Suited for EX-applications	no

Characteristics

Category of shock impact	2
Design, Strain relief	A

Dimensions

Dimensional drawing	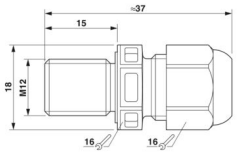
Length	35 mm
Length of the connecting thread	15 mm
Hole diameter	12.1 mm ... 12.2 mm
Wrench size, union nut	16 mm
Wrench size, support	16 mm
Hexagon angular dimension	18 mm
Thread type connection side	M12 x 1.5
Thread pitch	1.5 mm

Connection data

Tightening torque	2 Nm (Union nut)
	2 Nm (Support sleeve)

Material specifications

Color	light gray (RAL 7035)

Seal material	EPDM
Material for screw connection	PA

Cable/line

External cable diameter Cable 1	3 mm ... 7 mm
External cable diameter	4.1 mm ... 6 mm (UL)

Environmental and real-life conditions

Ambient conditions

Degree of protection	IP68 (5 bar / 0.5 h)
	IP69
Ambient temperature (operation)	-40 °C ... 100 °C (static)

Drawings

Dimensional drawing

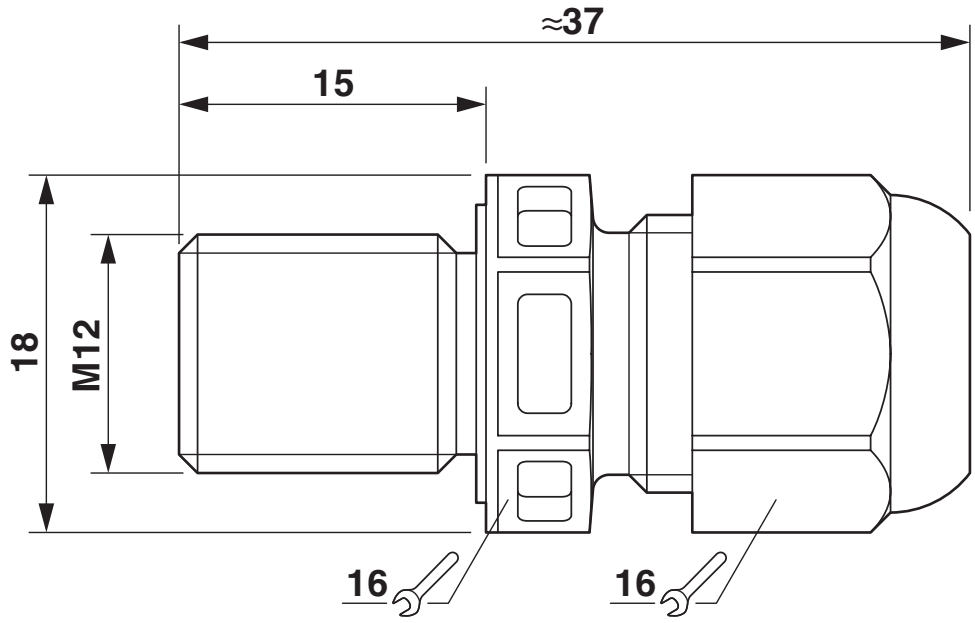

Approvals

To download certificates, visit the product detail page: https://www.phoenixcontact.com/us/products/1424513

cUL Recognized
Approval ID: E179850

UL Recognized
Approval ID: E179850

Classifications

ECLASS

ECLASS-13.0	27140801
ECLASS-15.0	27140801

ETIM

ETIM 10.0	EC000441

UNSPSC

UNSPSC 21.0	39121300

Environmental product compliance

EU RoHS

Fulfills EU RoHS substance requirements	Yes, No exemptions

China RoHS

Environment friendly use period (EFUP)	EFUP-E
	No hazardous substances above the limits

EU REACH SVHC

REACH candidate substance (CAS No.)	No substance above 0.1 wt%

EF3.1 Climate Change

CO2e kg	0.041 kg CO2e

Phoenix Contact 2026 © - all rights reserved
https://www.phoenixcontact.com

Phoenix Contact USA
586 Fulling Mill Road
Middletown, PA 17057, United States
(+717) 944-1300
info@phoenixcon.com