G-INS-M25-L68N-PNES-GY - Cable gland

1424477

https://www.phoenixcontact.com/us/products/1424477

Please be informed that the data shown in this PDF document is generated from our online catalog. Please find the complete data in the user documentation. Our general terms of use for downloads are valid.



Cable gland, material for screw connection: PA, application: Standard, external cable diameter 13 mm ... 18 mm, shielding: no, connecting thread: M25 x 1.5

Your advantages

- Plastic material conforms to UL 746C f1

Commercial data

Item number	1424477
Packing unit	5 pc
Minimum order quantity	5 pc
Sales key	BF68
Product key	AF7DCX
GTIN	4055626372679
Weight per piece (including packing)	22.5 g
Weight per piece (excluding packing)	22.82 g
Customs tariff number	39269097
Country of origin	TR

Technical data

Mounting

Assembly note	1) Mount screw connection support in the housing using the correct torque 2) Insert cable 3) Tighten union nut using the correct torque

Product properties

Product type	Cable screw gland
Application	Standard
No. of conductors	1
Manufacturer	BIMED
Manufacturer Designation	BM-05
Shielded	no
Execution of the strain relief	A

Characteristics

Category of shock impact	4
Design, Strain relief	A

Dimensions

Dimensional drawing	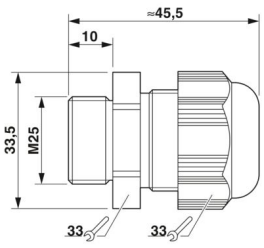
Length	42 mm
Length of the connecting thread	10 mm
Hole diameter	25.1 mm ... 25.2 mm
Wrench size, union nut	33 mm
Wrench size, support	33 mm
Hexagon angular dimension	33.5 mm
Thread type connection side	M25 x 1.5
Thread pitch	1.5 mm

Connection data

Tightening torque	8 Nm ±1 Nm (Cap nut) 3.5 Nm (Support sleeve)

Material specifications

Color	silver gray (RAL 7001)
Flammability rating according to UL 94	V2

Seal material	CR
Material for screw connection	PA

Cable/line

External cable diameter Cable 1	13 mm ... 18 mm
External cable diameter	13 mm ... 18 mm (for UL 514 B)

Environmental and real-life conditions

Ambient conditions

Degree of protection	IP66
	IP68 (5 bar / 0.5 h)
Enclosure rating (NEMA)	1
	4
	4X
	12
	13
Ambient temperature (operation)	-40 °C ... 100 °C (static)

Drawings

Dimensional drawing

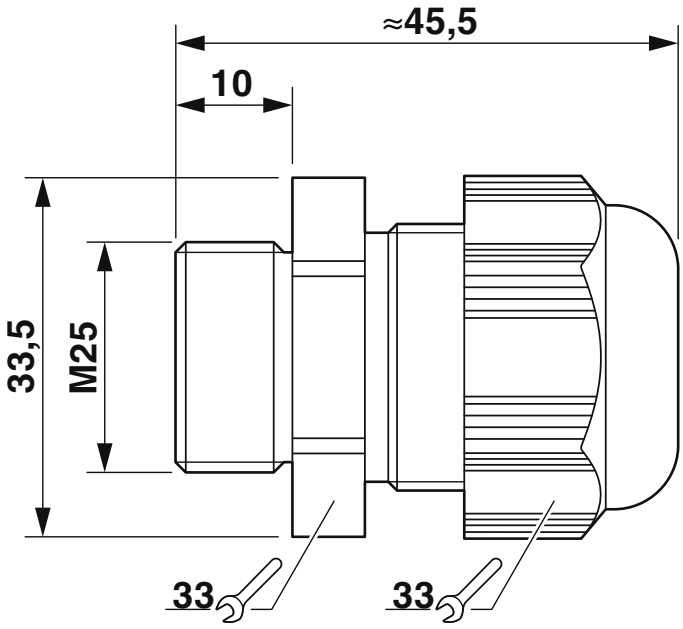

Dimensional drawing

Approvals

To download certificates, visit the product detail page: https://www.phoenixcontact.com/us/products/1424477

DNV
Approval ID: TAE00003WX

CSA
Approval ID: 115116

UL Listed
Approval ID: E199260

cUL Listed
Approval ID: E199260

Classifications

ECLASS

ECLASS-13.0	27140801
ECLASS-15.0	27140801

ETIM

ETIM 10.0	EC000441

UNSPSC

UNSPSC 21.0	39121300

Environmental product compliance

EU RoHS

Fulfills EU RoHS substance requirements	Yes, No exemptions

China RoHS

Environment friendly use period (EFUP)	EFUP-E
	No hazardous substances above the limits

EU REACH SVHC

REACH candidate substance (CAS No.)	No substance above 0.1 wt%

EF3.1 Climate Change

CO2e kg	0.114 kg CO2e

Phoenix Contact 2026 © - all rights reserved
https://www.phoenixcontact.com

Phoenix Contact USA
586 Fulling Mill Road
Middletown, PA 17057, United States
(+717) 944-1300
info@phoenixcon.com