G-ESIS-M25-S68N-PEPDS-BK - Cable gland

1424468

https://www.phoenixcontact.com/us/products/1424468

Please be informed that the data shown in this PDF document is generated from our online catalog. Please find the complete data in the user documentation. Our general terms of use for downloads are valid.



Cable gland, material for screw connection: PA, application: Ex, external cable diameter 10 mm . .. 17 mm, shielding: no, connecting thread: M25 x 1.5, color: jet black RAL 9005, with flat gasket

Product description

Cable gland, with flat gasket

Your advantages

- Glow-wire test: 750°C
- Weatherproof sealing material
- Halogen-free

Commercial data

Item number	1424468
Packing unit	10 pc
Minimum order quantity	10 pc
Sales key	BF68
Product key	AF7DDX
GTIN	4055626375588
Weight per piece (including packing)	22.4 g
Weight per piece (excluding packing)	21.32 g
Customs tariff number	39269097
Country of origin	DE

Technical data

Product properties

Product type	Cable screw gland
Application	Ex
No. of conductors	1
Manufacturer	WISKA
Manufacturer Designation	ESKE/1-e 25
Shielded	no

Ex data

Cable types that can be used	for unarmored cables
Suited for EX-applications	yes

Dimensions

Dimensional drawing	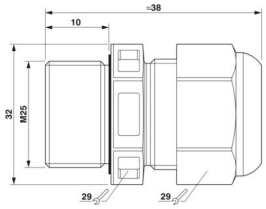
Length	38 mm
Length of the connecting thread	10 mm
Hole diameter	25.1 mm ... 25.3 mm
Wrench size, union nut	29 mm
Wrench size, support	29 mm
Hexagon angular dimension	33 mm
Thread type connection side	M25 x 1.5
Thread pitch	1.5 mm

Connection data

Tightening torque	3 Nm (Support sleeve)

Material specifications

Color	black (RAL 9005)
Material Screw connection	PA (Screw connection, halogen-free)
Seal material	EPDM (Flat gasket, halogen-free)
Glow wire ignition temperature GWIT according to EN 60695-2-13	750
Material for screw connection	PA

Cable/line

External cable diameter	10 mm ... 17 mm

Halogen-free	yes

Environmental and real-life conditions

Ambient conditions

Degree of protection	IP66
	IP68 (5 bar / 0.5 h)
Ambient temperature (operation)	-40 °C ... 75 °C (static)

Drawings

Dimensional drawing

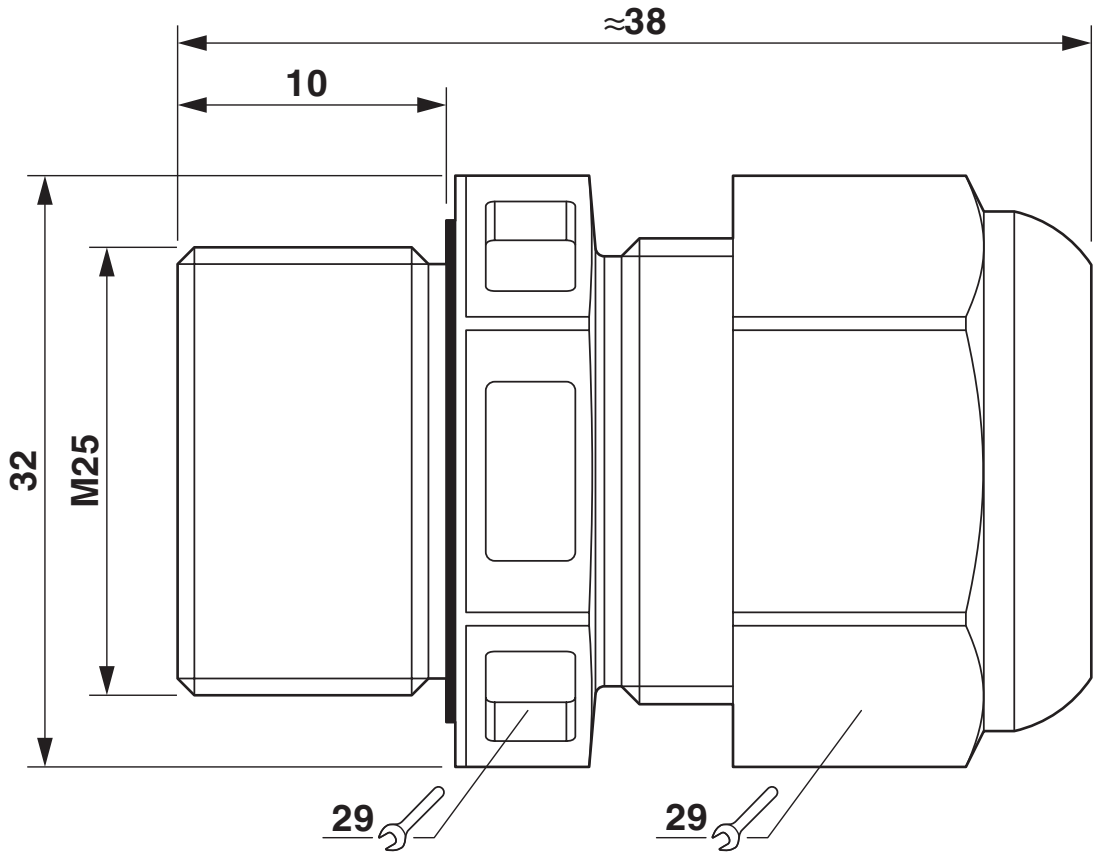

Dimensional drawing

Approvals

To download certificates, visit the product detail page: https://www.phoenixcontact.com/us/products/1424468

EAC Ex
Approval ID: RU C-DE.HA67.B.00120

IECEx
Approval ID: IECEx PTB 13.0034X

ATEX
Approval ID: PTB 13 ATEX 1015 X

DNV GL-EX
Approval ID: TAE00002SV

Classifications

ECLASS

ECLASS-13.0	27140802
ECLASS-15.0	27140802

ETIM

ETIM 10.0	EC000441

UNSPSC

UNSPSC 21.0	39121300

Environmental product compliance

EU RoHS

Fulfills EU RoHS substance requirements	Yes, No exemptions

China RoHS

Environment friendly use period (EFUP)	EFUP-E
	No hazardous substances above the limits

EU REACH SVHC

REACH candidate substance (CAS No.)	No substance above 0.1 wt%

EF3.1 Climate Change

CO2e kg	0.195 kg CO2e

Phoenix Contact 2026 © - all rights reserved
https://www.phoenixcontact.com

Phoenix Contact USA
586 Fulling Mill Road
Middletown, PA 17057, United States
(+717) 944-1300
info@phoenixcon.com