HC-STA-A04PT-BWS-HT-M20-PLRBK - Connector set

1424446

https://www.phoenixcontact.com/us/products/1424446

Please be informed that the data shown in this PDF document is generated from our online catalog. Please find the complete data in the user documentation. Our general terms of use for downloads are valid.



Connector set, D7, number of positions: 4, material: PA, connection method: Push-in connection, connection cross section: AWG 26- 16, cable outlet: straight

Commercial data

Item number	1424446
Packing unit	1 pc
Minimum order quantity	1 pc
Sales key	BF63
Product key	AF7AFX
GTIN	4055626372754
Weight per piece (including packing)	91.4 g
Weight per piece (excluding packing)	91.4 g
Customs tariff number	85366990
Country of origin	CN

Set consists of

HC-A04-I-PT-M - Contact insert

1585278

https://www.phoenixcontact.com/us/products/1585278



Contact insert, number of positions: 4+PE, size: D7, number of connections per position: 1, Pin, Push-in connection, 230 V/400 V, 10 A, 0.14 mm^2 ... 1.5 mm^2

HC-A04-I-PT-F - Contact insert

1585281

https://www.phoenixcontact.com/us/products/1585281



Contact insert, number of positions: 4+PE, size: D7, number of connections per position: 1, Socket, Push-in connection, 230 V/400 V, 10 A, 0.14 mm^2 ... 1.5 mm^2

HC-STA-D07-BWS-PL-BK - Housing

1419265

https://www.phoenixcontact.com/us/products/1419265



Panel mounting base D7, with single locking latch, material: PA, height: 25.5 mm, cable gland: none, Standard

HC-STA-D07-HHFS-1TGM20-PL-BK - Housing

1419255

https://www.phoenixcontact.com/us/products/1419255



Sleeve housing D7, for single locking latch, material: PA, cable outlets: 1, straight, 1x M20, height: 77.6 mm, cable gland: with, Standard

Technical data

Product properties

Product type	Connector set
Housing type	Complete housing
Application	Standard
Type	D7
Number of positions	4
No. of cable outlets	1
Protective cover	no
Cable outlet	straight

Insulation characteristics

Overvoltage category	III
Degree of pollution	3

Electrical properties

Rated voltage (III/3)	230 V (Conductor-PE)
	400 V (Conductor-Conductor)
Rated voltage for power contacts	230/400 V
Rated surge voltage	4 kV
Rated current	10 A
Nominal voltage U_N	230 V
Nominal current I_N	10 A

Connection data

Connection method	Push-in connection
Connection technology	Push-in connection
Conductor cross-section	0.14 mm² ... 1.5 mm² (with ferrule)
	0.14 mm² ... 1.5 mm² (with ferrule)
Connection cross section AWG	26 ... 16 (with ferrule)
Stripping length of the individual wire	10 mm

Dimensions

Dimensional drawing	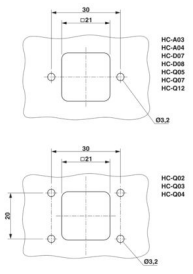
Hole diameter	3.2 mm

Installation dimensions

Width of the assembly cutout	21 mm
Length of the assembly cutout	21 mm

Material specifications

Flammability rating according to UL 94	V0
Seal material	NBR, conductive
Housing material	PA
Contact material	Copper alloy
Contact surface material	Ag
Contact carrier material	PC
Locking latch material	PA

Cable/line

External cable diameter	4 mm ... 10 mm

Environmental and real-life conditions

Ambient conditions

Degree of protection	IP66
Enclosure rating (NEMA)	12 (UL 50e)
Impact strength	IK06
Ambient temperature (operation)	-40 °C ... 125 °C

Drawings

Dimensional drawing

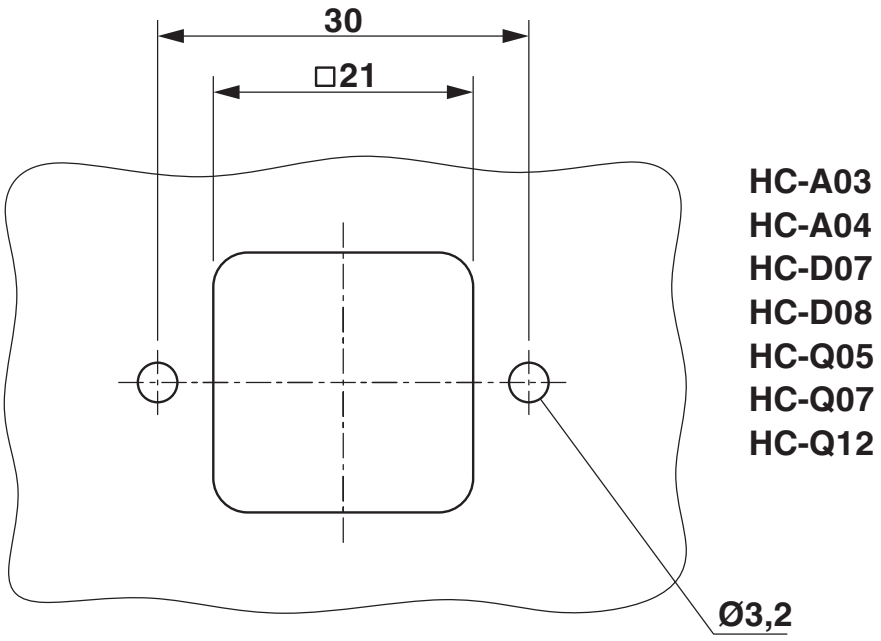

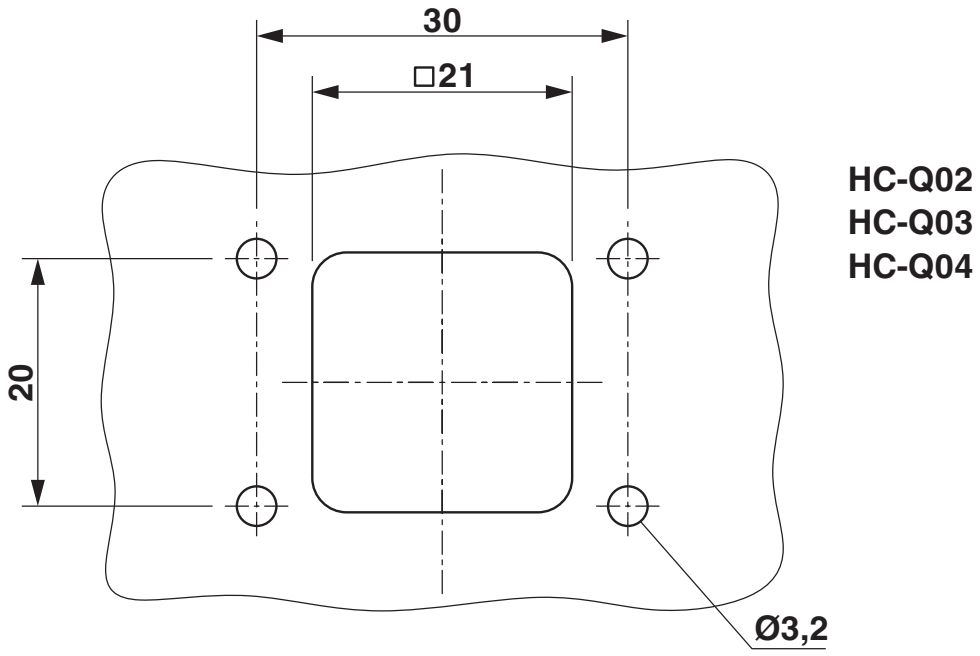

Mounting cutout

Schematic diagram

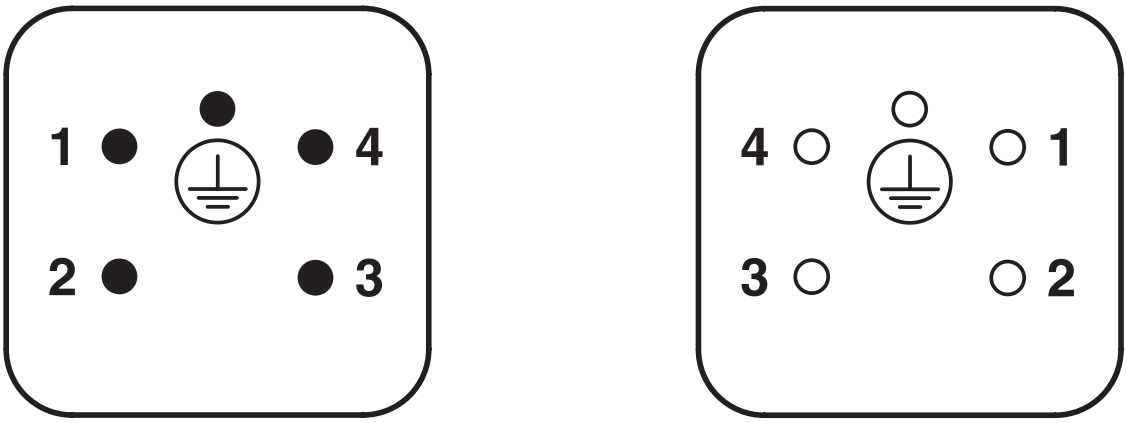

Pin assignment, connection side, pin left, socket right

Diagram

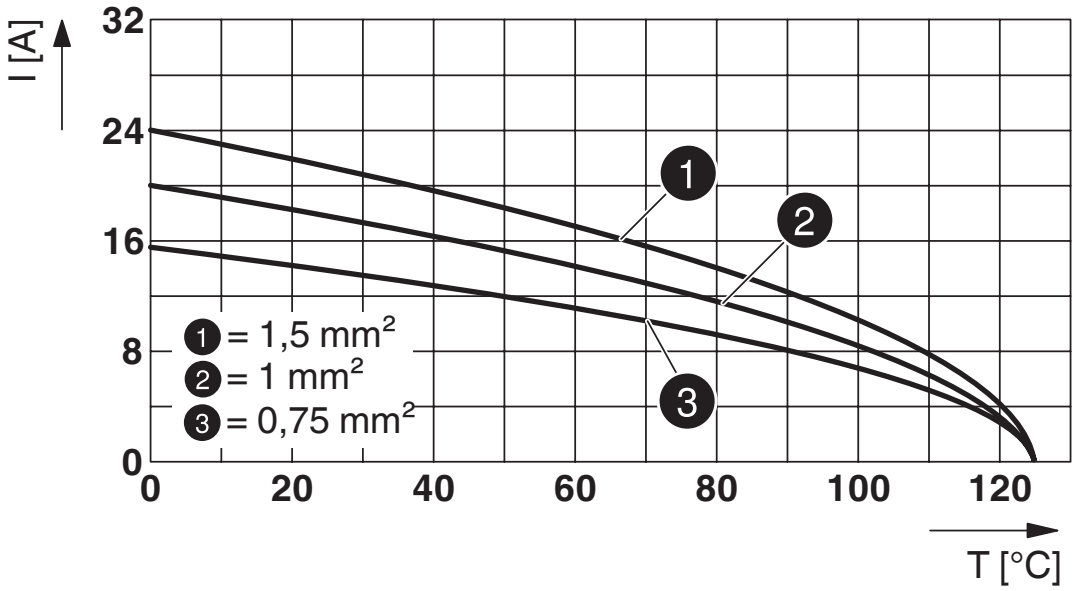

Derating diagram

Approvals

To download certificates, visit the product detail page: https://www.phoenixcontact.com/us/products/1424446

DNV
Approval ID: TAE000037S

Classifications

ECLASS

ECLASS-13.0	27440113
ECLASS-15.0	27440113

ETIM

ETIM 10.0	EC002636

UNSPSC

UNSPSC 21.0	39121400

Environmental product compliance

EU RoHS

Fulfills EU RoHS substance requirements	Yes, No exemptions

China RoHS

Environment friendly use period (EFUP)	EFUP-E
	No hazardous substances above the limits

EU REACH SVHC

REACH candidate substance (CAS No.)	No substance above 0.1 wt%

Phoenix Contact 2026 © - all rights reserved
https://www.phoenixcontact.com

Phoenix Contact USA
586 Fulling Mill Road
Middletown, PA 17057, United States
(+717) 944-1300
info@phoenixcon.com