HC-STA-D15-SLWSC-2SSP21-EL-AL - Housing

1424373

https://www.phoenixcontact.com/us/products/1424373

Please be informed that the data shown in this PDF document is generated from our online catalog. Please find the complete data in the user documentation. Our general terms of use for downloads are valid.



Surface mounting housing D15, with single locking latch, material: Die-cast aluminum, salt water resistant, protective cover material: PC, cable outlets: 2, lateral, 2x Pg21, height: 52 mm, cable gland: none, protective cover: yes, Standard

Commercial data

Item number	1424373
Packing unit	1 pc
Minimum order quantity	1 pc
Sales key	BF56
Product key	AF7APE
GTIN	4055626371139
Weight per piece (including packing)	178.5 g
Weight per piece (excluding packing)	170 g
Customs tariff number	85389099
Country of origin	CN

Technical data

Product properties

Product type	Housing with locking latch
Housing type	Surface mounting housing
Product family	HC-STA-D
Application	Standard
Type	D15
No. of cable outlets	2
Type of the screw connection	2x Pg21
Protective cover	yes
Cable outlet	lateral
Pg screw connection	none

Dimensions

Dimensional drawing	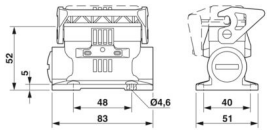
Width	51 mm
Height	52 mm
Length	80 mm
Hole diameter	4.5 mm

Material specifications

Flammability rating according to UL 94	V0 (Interlock)
	V0 (Protective cover)
Housing material	Die-cast aluminum, salt water resistant
Housing surface material	uncoated
Material, protective cover	PC
Locking latch material	PA

Mechanical properties

Mechanical data

Type of the screw connection	2x Pg21
Locking type	Latch

Connection data

Tightening torque	0.8 Nm ... 1.2 Nm (for M4 mounting screws on the surface-mount housing)

Mounting

Assembly note	One opening is sealed with a plastic filler plug and can be

	opened using a screwdriver.

Environmental and real-life conditions

Ambient conditions

Degree of protection	IP66 (with locked protective cover)
	IP67 (when plugged in)
Impact strength	IK08
Ambient temperature (operation)	-40 °C ... 125 °C

Drawings

Dimensional drawing

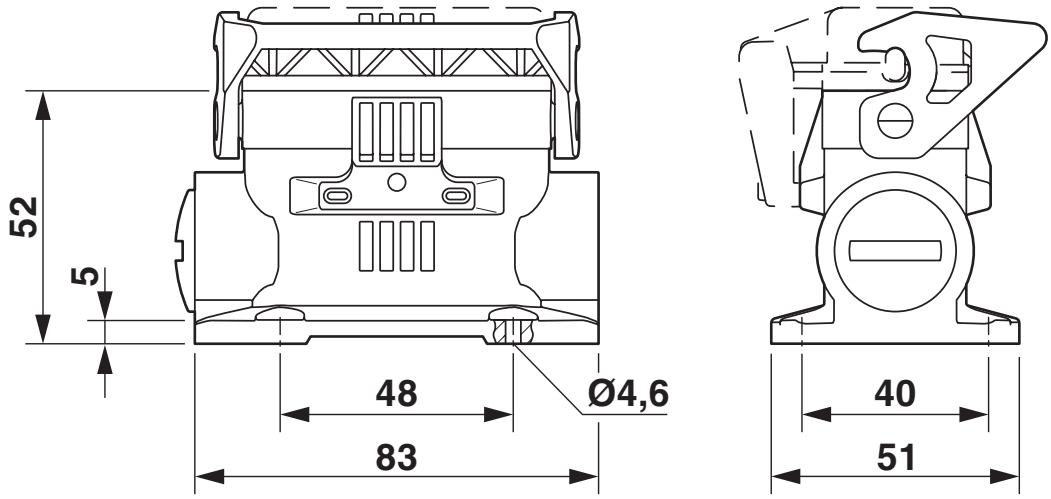

Dimensional drawing

Approvals

To download certificates, visit the product detail page: https://www.phoenixcontact.com/us/products/1424373

DNV
Approval ID: TAE000037S

cUL Recognized
Approval ID: E255026

UL Recognized
Approval ID: E255026

Classifications

ECLASS

ECLASS-13.0	27440202
ECLASS-15.0	27440202

ETIM

ETIM 10.0	EC000437

UNSPSC

UNSPSC 21.0	31261500

Environmental product compliance

EU RoHS

Fulfills EU RoHS substance requirements	Yes, No exemptions

China RoHS

Environment friendly use period (EFUP)	EFUP-E
	No hazardous substances above the limits

EU REACH SVHC

REACH candidate substance (CAS No.)	No substance above 0.1 wt%

Phoenix Contact 2026 © - all rights reserved
https://www.phoenixcontact.com

Phoenix Contact USA
586 Fulling Mill Road
Middletown, PA 17057, United States
(+717) 944-1300
info@phoenixcon.com