SAC-4P- 5,0-PUR/M12FRS PE SH - Power cable

1424102

https://www.phoenixcontact.com/us/products/1424102

Please be informed that the data shown in this PDF document is generated from our online catalog. Please find the complete data in the user documentation. Our general terms of use for downloads are valid.



Power cable, 4-position, PUR halogen-free, orange RAL 2003, shielded (Advanced Shielding Technology), free cable end, on Socket angled M12, coding: S, cable length: 5 m, for AC current up to 12 A/690 V

Your advantages

- Easy and safe: 100 % electrically tested plug-in components
- Protection against incorrect connection using special S-coding
- Shield power reliably – 360° shielding to reduce electromagnetic loads
- Our standard: robust halogen-free PUR cable

Commercial data

Item number	1424102
Packing unit	1 pc
Minimum order quantity	1 pc
Sales key	BF05
Product key	AF1CCP
GTIN	4046356693073
Weight per piece (including packing)	608.2 g
Weight per piece (excluding packing)	743 g
Customs tariff number	85444290
Country of origin	PL

Technical data

Product properties

Product type	Power cable
Application	Energy supply
Number of positions	4
No. of cable outlets	1
Shielded	yes
Coding	S

Insulation characteristics

Overvoltage category	III
Degree of pollution	3

Material specifications

Flammability rating according to UL 94	V0
Material of grip body	PP
Contact material	CuZn
Contact surface material	Ni/Au
Contact carrier material	PA
Material for screw connection	Zinc die-cast, nickel-plated

Electrical properties

Insulation resistance	≥ 100 MΩ
Nominal voltage U_N	690 V AC
Nominal current I_N	12 A

Mechanical properties

Mechanical data

Insertion/withdrawal cycles	> 100

Connector

Connection 1

Type	free cable end

Connection 2

Type	Socket angled M12
Coding type	S (Power)

Cable/line

Cable length	5 m

PUR halogen-free orange shielded [PUR]

UL AWM Style	80°C/1000 V

Number of positions	4
Shielded	yes
Cable type	PUR halogen-free orange shielded [PUR]
Conductor structure, voltage supply	44x 0.20 mm
AWG power supply	16
Conductor cross-section	4x 1.5 mm²
Wire diameter incl. insulation	≤ 2.35 mm
External cable diameter	8.20 mm ±0.3 mm
Outer sheath, material	PUR
External sheath, color	orange RAL 2003
Conductor material	Bare Cu litz wires
Material wire insulation	PP
Single wire, color	black 1, black 2, black 3, green/yellow
Thickness, insulation	0.36 mm
Thickness, outer sheath	0.90 mm
Overall twist	4 wires optimally twisted
Max. conductor resistance	≤ 14.1 Ω/km (at 20 °C)
Insulation resistance	≥ 1 GΩ*km (at 20 °C)
Nominal voltage, cable	1000 V AC
Test voltage	≥ 10000 V AC (Spark test)
Minimum bending radius, fixed installation	5 x D
Minimum bending radius, flexible installation	10 x D
Dynamic load capacity (bending)	Max. bending cycles: 5000000, Bending radius: 10 x D, Traversing path: 10 m, Traversing rate: 3 m/s, Acceleration: 10 m/s²
Dynamic load capacity (torsion)	Torsion: ±180 °/m, Torsion cycles: ≥500000, Torsional frequency: 35 cycles/min.
Halogen-free	in accordance with DIN VDE 0472 part 815
Flame resistance	According to DIN EN 60332-2-2 (20 s)
	UL 1581, FT2
Resistance to oil	according to DIN EN 60811-404, 168 h at 100 °C
Other resistance	UV resistant
	Low adhesion
Ambient temperature (operation)	-50 °C ... 85 °C (cable, fixed installation)
	-30 °C ... 85 °C (Cable, flexible installation)

Environmental and real-life conditions

Ambient conditions

Degree of protection	IP65
	IP67 (without preloading, as additional test in accordance with IEC 60529)
Ambient temperature (operation) (male connector/female connector)	-25 °C ... 85 °C (Plug / socket)

Standards and regulations

Standard designation	M12 connector
Standards/specifications	IEC 61076-2-111

Drawings

Dimensional drawing

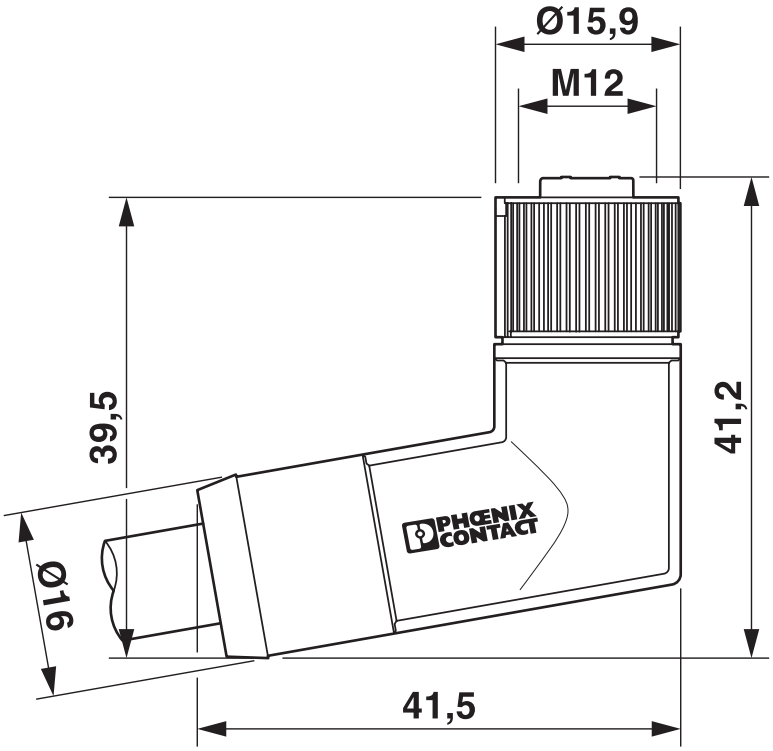

M12 x 1 socket, angled

Schematic diagram

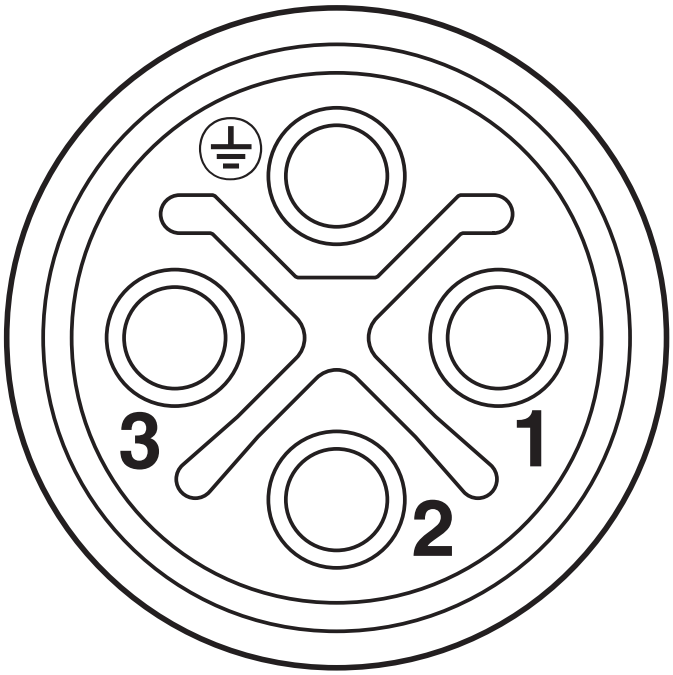

Pin assignment of M12 socket, 4-pos., S-coded, socket side view

Diagram

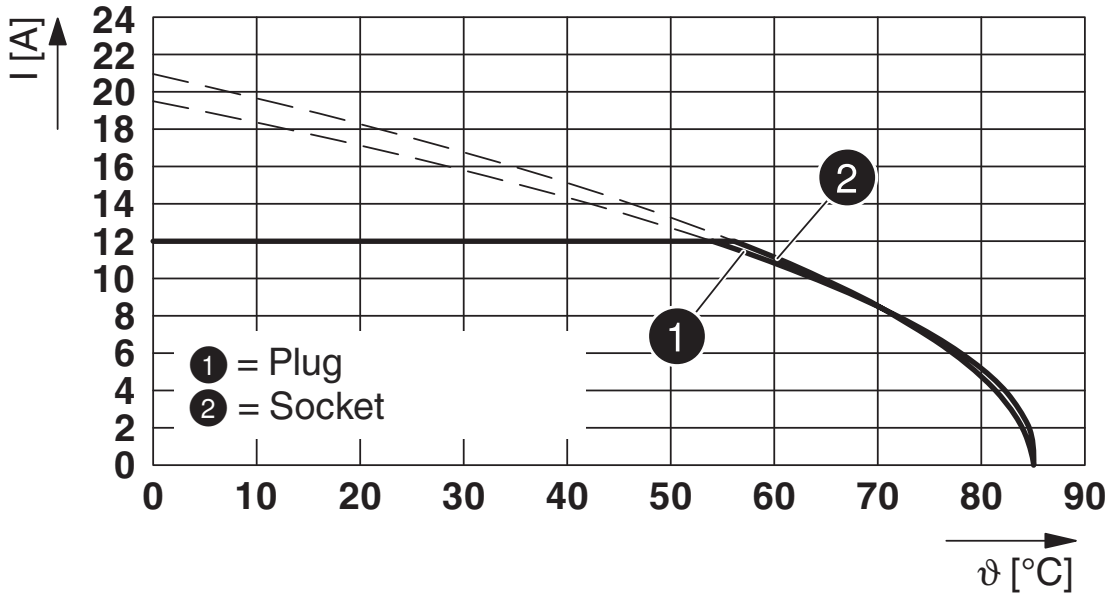

Base curve

Circuit diagram

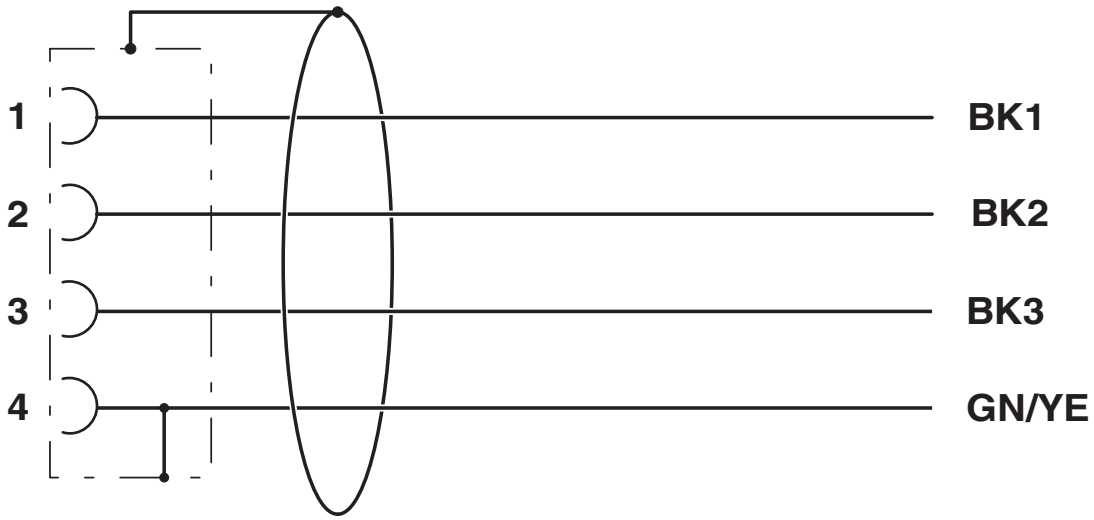

Contact assignment of the M12 socket

Approvals

To download certificates, visit the product detail page: https://www.phoenixcontact.com/us/products/1424102

UL Listed
Approval ID: FILE E 468743

	Nominal voltage U_N	Nominal current I_N	Cross section AWG	Cross section mm^2
keine				
	600 V	12 A	- 16	- 16

cUL Listed
Approval ID: FILE E 468743

	Nominal voltage U_N	Nominal current I_N	Cross section AWG	Cross section mm^2
keine				
	600 V	12 A	- 16	-

EAC-RoHS
Approval ID: RU D-DE.HB35.B.00387

Classifications

ECLASS

ECLASS-13.0	27060327
ECLASS-15.0	27060327

ETIM

ETIM 10.0	EC001855

UNSPSC

UNSPSC 21.0	26121600

Environmental product compliance

EU RoHS

Fulfills EU RoHS substance requirements	Yes, No exemptions

China RoHS

Environment friendly use period (EFUP)	EFUP-E
	No hazardous substances above the limits

EU REACH SVHC

REACH candidate substance (CAS No.)	No substance above 0.1 wt%

Phoenix Contact 2026 © - all rights reserved
https://www.phoenixcontact.com

Phoenix Contact USA
586 Fulling Mill Road
Middletown, PA 17057, United States
(+717) 944-1300
info@phoenixcon.com