# QPD P4X2,5 6-10 GY GY - Connector

1424019

https://www.phoenixcontact.com/us/products/1424019

Please be informed that the data shown in this PDF document is generated from our online catalog. Please find the complete data in the user documentation. Our general terms of use for downloads are valid.



Connector, connection method: IDC connection, 1 $mm^2$ ... 2.5 $mm^2$, 690 V, 20 A, PA, gray, with QUICKON nut, coding: Coding profile, external cable diameter: 6 mm ... 10 mm

## Your advantages

- Innovative and time saving - QUICKON fast connection for time saving of up to 80 % for on-site connection
- Robust throughout: housing with IP68/IP69K and IK07 protection for a wide range of applications
- Safer connection with mechanical coding to protect against mismatching, and touch-proof protection in accordance with DIN EN 0105
- Easy maintenance – the connectors enable fast device replacement and preassembled cables simplify startup

## Commercial data

| | |
|---|---|
| Item number | 1424019 |
| Packing unit | 1 pc |
| Minimum order quantity | 1 pc |
| Sales key | BF50 |
| Product key | AF6BBB |
| GTIN | 4055626366272 |
| Weight per piece (including packing) | 50.9 g |
| Weight per piece (excluding packing) | 22.22 g |
| Customs tariff number | 85366990 |
| Country of origin | PL |

# Technical data

## Product properties

| | |
|---|---|
| Product type | Installation connector |
| Product family | QPD |
| Type | QPD 4x2,5 |
| Number of positions | 4 |
| Position marking | 1, 2, 3, 4 |
| Number of connections | 4 |
| Number of connections per position | 1 |
| Coding | Coding profile |

### Insulation characteristics

| | |
|---|---|
| Overvoltage category | III |
| Degree of pollution | 3 |

## Electrical properties

| | |
|---|---|
| Rated surge voltage (II/2) | 6 kV |
| Rated surge voltage (III/2) | 6 kV |
| Rated surge voltage (III/3) | 6 kV |
| Rated current | 20 A |
| Contact resistance | < 4 mΩ |
| rated voltage (II/2) | 1000 V |
| rated voltage (III/2) | 690 V |
| Rated voltage (III/3) | 690 V |
| Nominal voltage $U_N$ | 690 V AC |
| | 690 V DC |
| Nominal current $I_N$ | 20 A |

## Connection data

### Connection technology

| | |
|---|---|
| Connection method On the field side | IDC connection |
| Frequency of connections between conductors of the same cross section | max. 10 |

### Conductor connection

| | |
|---|---|
| Conductor cross-section flexibel | 1 mm² ... 2.5 mm² |
| Conductor cross-section solid | 1 mm² ... 2.5 mm² |
| Connection cross section AWG | 16 ... 14 |
| Tightening torque Union nut | 10 Nm |

## Dimensions

| | |
|---|---|
| Dimensional drawing | 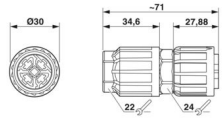  |
| Width | 30 mm |
| Height | 30 mm |
| Length | 71 mm |
| Diameter | 30 mm |

## Material specifications

| | |
|---|---|
| Material Housing | PA |
| Material Contact | Cu |
| Material Contact surface | silver-plated |
| Material Seal | NBR |
| Flammability rating according to UL 94 | V0 |
| Material wire insulation | PVC/PE/TPE/rubber |

## Cable/line

| | |
|---|---|
| Structure of individual litz in acc. with VDE 0295 / smallest wire diameter | VDE 0295 class 1 to 6/min. 0.15 mm |
| External cable diameter | 6 mm ... 10 mm |
| Wire diameter including insulation | 2 mm ... 3.6 mm |
| Position marking | 1, 2, 3, 4 |
| Material wire insulation | PVC/PE/TPE/rubber |
| Halogen-free | yes |

## Mechanical properties

Mechanical data

| | |
|---|---|
| Insertion/withdrawal cycles | max. 50 |

## Environmental and real-life conditions

Ambient conditions

| | |
|---|---|
| Degree of protection | IP66 |
| | IP68 (2 m / 24 h) |
| | IP69K |
| | Touch-proof when not plugged in (IP2X) |
| Impact strength | IK07 |
| Ambient temperature (operation) | -40 °C ... 100 °C |
| Temperature when conductor connected | -5 °C ... 50 °C |
| Ambient temperature (storage/transport) | -40 °C ... 100 °C |

## Drawings

Dimensional drawing

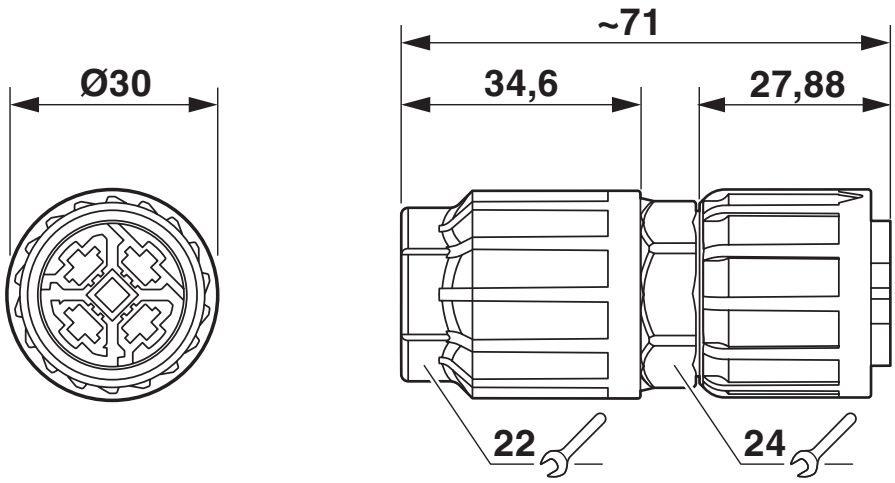

## Approvals

To download certificates, visit the product detail page: https://www.phoenixcontact.com/us/products/1424019

**IECEE CB Scheme**
Approval ID: DE1-65875

**VDE Zeichengenehmigung**
Approval ID: 40029149

| | Nominal voltage $U_N$ | Nominal current $I_N$ | Cross section AWG | Cross section $mm^2$ |
|---|---|---|---|---|
| keine | | | | |
| Only flexible conductors | 400 V | 20 A | - | 1.5 - 2.5 |
| Only rigid conductors | 690 V | 20 A | - | 1.5 - 2.5 |

**UL Listed**
Approval ID: E468743

| | Nominal voltage $U_N$ | Nominal current $I_N$ | Cross section AWG | Cross section $mm^2$ |
|---|---|---|---|---|
| keine | | | | |
| | 600 V | 10 A | - 16 | - 16 |

**cUL Listed**
Approval ID: E468743

| | Nominal voltage $U_N$ | Nominal current $I_N$ | Cross section AWG | Cross section $mm^2$ |
|---|---|---|---|---|
| keine | | | | |
| | 600 V | 10 A | - 16 | - |

**DNV GL**
Approval ID: TAE00003J5

## Classifications

### ECLASS

| | |
|---|---|
| ECLASS-13.0 | 27440605 |
| ECLASS-15.0 | 27440605 |

### ETIM

| | |
|---|---|
| ETIM 10.0 | EC002560 |

### UNSPSC

| | |
|---|---|
| UNSPSC 21.0 | 39121400 |

## Environmental product compliance

EU RoHS

| | |
|---|---|
| Fulfills EU RoHS substance requirements | Yes, No exemptions |

China RoHS

| | |
|---|---|
| Environment friendly use period (EFUP) | EFUP-E |
| | No hazardous substances above the limits |

EU REACH SVHC

| | |
|---|---|
| REACH candidate substance (CAS No.) | Triphenyl phosphate(CAS: 115-86-6) |


Phoenix Contact 2026 © - all rights reserved
https://www.phoenixcontact.com



Phoenix Contact USA
586 Fulling Mill Road
Middletown, PA 17057, United States
(+717) 944-1300
info@phoenixcon.com