NBC-M8MSD/ 2,0-93C - Network cable

1423704

https://www.phoenixcontact.com/us/products/1423704

Please be informed that the data shown in this PDF document is generated from our online catalog. Please find the complete data in the user documentation. Our general terms of use for downloads are valid.



Network cable, PROFINET CAT5 (100 Mbps), EtherCAT® CAT5 (100 Mbps), 4-position, PUR halogen-free, green RAL 6018, shielded (Advanced Shielding Technology), Plug straight M8, coding: D / IP67, on free cable end, cable length: 2 m

Commercial data

Item number	1423704
Packing unit	1 pc
Minimum order quantity	1 pc
Sales key	BF02
Product key	AF1BJI
GTIN	4055626560472
Weight per piece (including packing)	146 g
Weight per piece (excluding packing)	146 g
Customs tariff number	85444290
Country of origin	PL

Technical data

Notes

General	This product corresponds to the PROFINET Cabling and Interconnection Technology Guideline for PROFINET regulations, version 2.00, order no: 2.252, Chapter 8.2 Connectors for Outside Environment (Balanced cabling)

Product properties

Product type	Data cable preassembled
Application	Standard
Number of positions	4
No. of cable outlets	1
Shielded	yes
Coding	D

Interfaces

Signal type/category	PROFINET CAT5 (IEC 11801), 100 Mbps
	EtherCAT® CAT5 (IEC 11801), 100 Mbps

Signaling

Status display	no
Status display present	no

Electrical properties

Nominal voltage U_N	48 V AC
	60 V DC
Nominal current I_N	4 A
Transmission medium	Copper
Transmission speed	100 Mbps

Connector

Connection 1

Type	Plug straight M8 / IP67
Number of positions	4
Coding type	D (Data)
Shielded	yes
Handle color	black
Material	CuSn (Contact)
	Ni/Au (Contact surface)
	PA 6.6 (Contact carrier)
	TPU, hardly inflammable, self-extinguishing (Grip body)
	Brass, nickel-plated (Screw connection)
Insertion/withdrawal cycles	≥ 100

Insulation resistance	≥ 100 MΩ
Tightening torque	0.2 Nm
Degree of protection	IP67
Ambient temperature (operation)	-25 °C ... 90 °C

Connection 2

Type	free cable end

Cable/line

Cable length	2 m

PROFINET drag chain CAT5 [93C]

Dimensional drawing	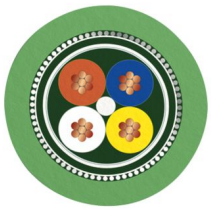
UL AWM Style	20233 (80°C/300 V)
Number of positions	4
Shielded	yes
Cable type	PROFINET drag chain CAT5 [93C]
Conductor structure	1x4xAWG22/7, SF/TQ
AWG signal line	22
Conductor cross-section	4x 0.34 mm²
Wire diameter incl. insulation	1.5 mm ±0.05 mm
External cable diameter	6.50 mm ±0.2 mm
Outer sheath, material	PUR
External sheath, color	green RAL 6018
Conductor material	Tin-plated Cu litz wires
Material wire insulation	PE
Single wire, color	white, yellow, blue, orange
Overall twist	Star quad
Optical shield covering	85 %
Insulation resistance	≥ 500 MΩ*km
Loop resistance	≤ 120.00 Ω/km
Wave impedance	100 Ω ±15 Ω (at 1 ... 100 MHz)
Nominal voltage, cable	≤ 300 V
Test voltage Core/Core	2000 V (50 Hz, 1 min.)
Test voltage Core/Shield	2000.00 V (50 Hz, 1 min.)
Minimum bending radius, fixed installation	5 x D
Minimum bending radius, flexible installation	7.5 x D
Dynamic load capacity (bending)	Max. bending cycles: 3000000, Bending radius: 200 mm,

	Traversing path: 10 m, Traversing rate: 4 m/s, Acceleration: 4 m/s²
Dynamic load capacity (torsion)	Torsion: ±30 °/m
Halogen-free	according to IEC 60754-1
Flame resistance	according to IEC 60332-1-2
	in accordance with UN ECE-R 118.03
	according to CSA C 22.2 No. 210-FT1
Resistance to oil	in accordance with DIN EN 60811-404
Other resistance	UV resistant
Special properties	Flexible cable conduit capable
Ambient temperature (operation)	-40 °C ... 70 °C (cable, fixed installation)
	-40 °C ... 70 °C (Cable, flexible installation)

Environmental and real-life conditions

Ambient conditions

Degree of protection	IP65
	IP67

Standards and regulations

M8

Standard designation	M8 connector
Standards/specifications	IEC 61076-2-114

Drawings

Dimensional drawing

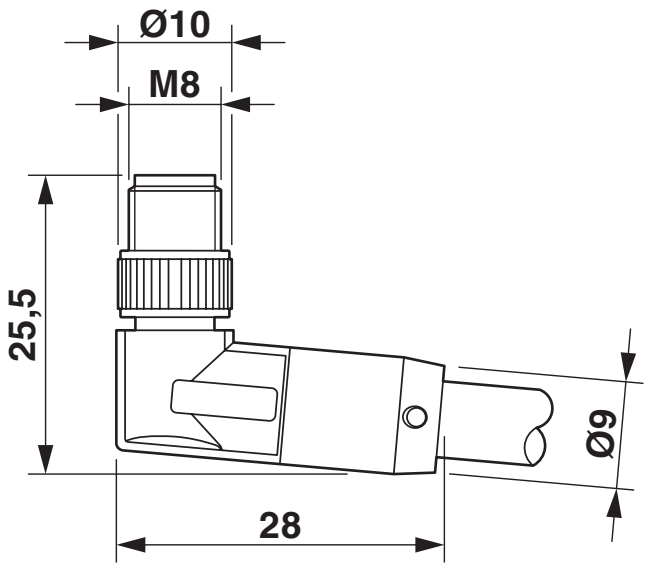

Plug M8 x 1, angled, shielded

Dimensional drawing

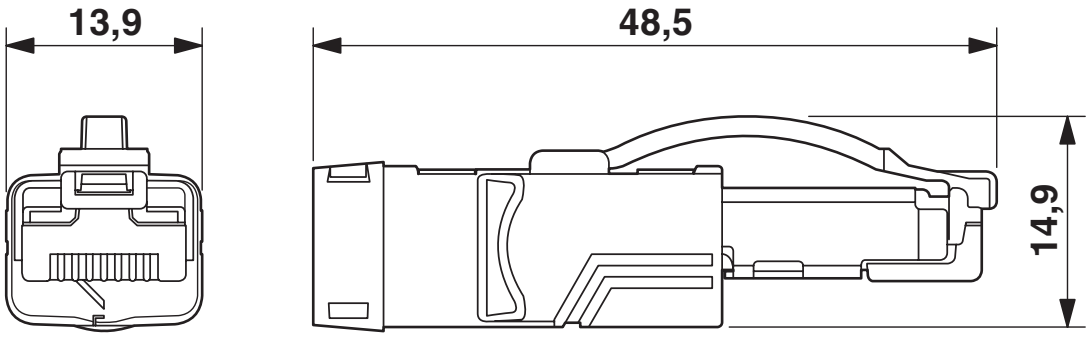

RJ45 connector, IP20

Schematic diagram

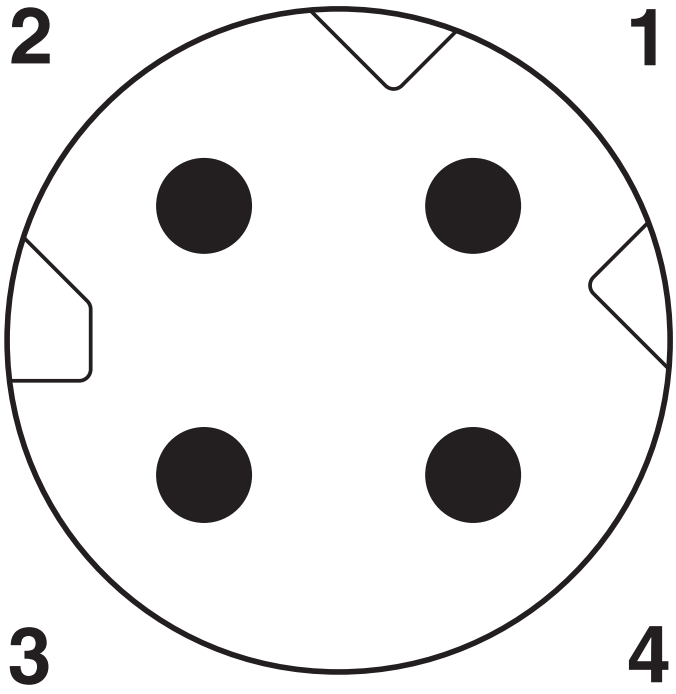

Pin assignment M8 male connector, 4-pos., D-coded, view of pin side

Schematic diagram

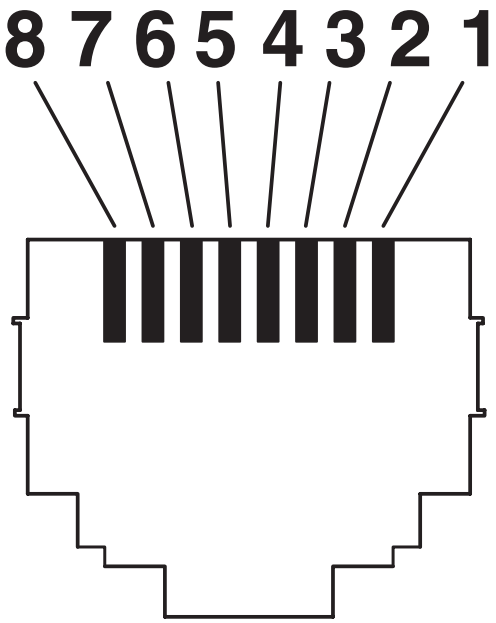

Connector pin assignment plug RJ45

Circuit diagram

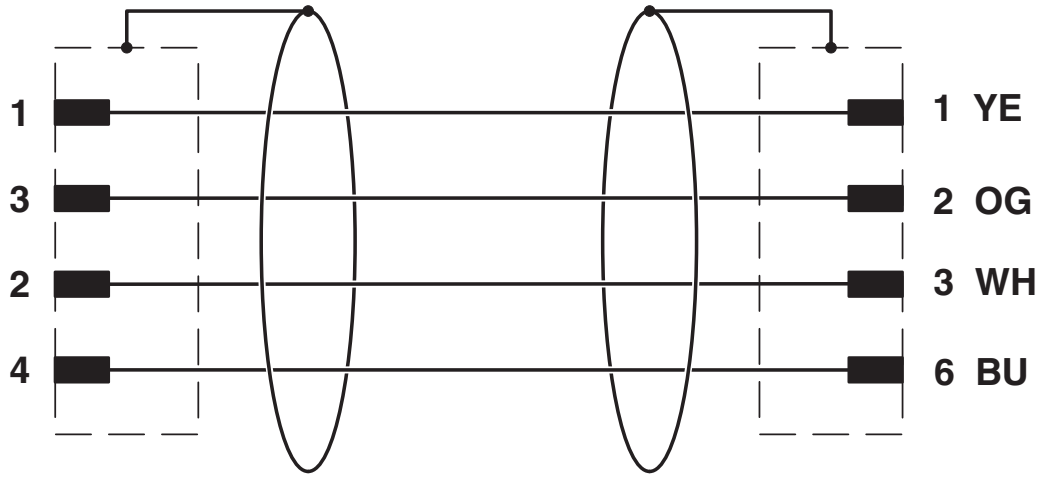

Contact assignment of the M8 and RJ45 plug

Approvals

To download certificates, visit the product detail page: https://www.phoenixcontact.com/us/products/1423704

UL Listed
Approval ID: E335024

	Nominal voltage U_N	Nominal current I_N	Cross section AWG	Cross section mm^2
keine				
	30 V	0.5 A	-	-

cUL Listed
Approval ID: E335024

	Nominal voltage U_N	Nominal current I_N	Cross section AWG	Cross section mm^2
keine				
	30 V	0.5 A	-	-

Classifications

ECLASS

ECLASS-13.0	27060307
ECLASS-15.0	27060307

ETIM

ETIM 10.0	EC002599

UNSPSC

UNSPSC 21.0	26121600

Environmental product compliance

EU RoHS

Fulfills EU RoHS substance requirements	Yes, No exemptions

China RoHS

Environment friendly use period (EFUP)	EFUP-E
	No hazardous substances above the limits

EU REACH SVHC

REACH candidate substance (CAS No.)	No substance above 0.1 wt%

Phoenix Contact 2026 © - all rights reserved
https://www.phoenixcontact.com

Phoenix Contact USA
586 Fulling Mill Road
Middletown, PA 17057, United States
(+717) 944-1300
info@phoenixcon.com