MC-25-MULTI-65-PVO-BK - Cable feed-through plates

1422349

https://www.phoenixcontact.com/us/products/1422349

Please be informed that the data shown in this PDF document is generated from our online catalog. Please find the complete data in the user documentation. Our general terms of use for downloads are valid.



Cable feed-through plates, no. of conductors: 25, external cable diameter: 4x 5 mm ... 7 mm, 4x 8 mm ... 12 mm, 12x 10 mm ... 14 mm, 4x 14 mm ... 20 mm, 1x 20 mm ... 26 mm, material: galvanized sheet steel (Core), material: TPE-SEBS (external material), color: black, length: 222 mm, width: 92 mm, height: 14 mm

Your advantages

- Oil-resistant according to UL 157

Commercial data

Item number	1422349
Packing unit	1 pc
Minimum order quantity	1 pc
Sales key	BF67
Product key	AF7CAX
GTIN	4055626301846
Weight per piece (including packing)	283.4 g
Weight per piece (excluding packing)	283.4 g
Customs tariff number	39269097
Country of origin	FI

Technical data

Notes

Order information:	incl. mounting screws
General	2 mm thick coated, galvanized sheet steel

Product properties

Product type	Cable feed-through
No. of conductors	25

Connection data

External cable diameter	4x 5 mm ... 7 mm
Tightening torque	1.5 Nm ... 2 Nm (Mounting screws)

Dimensions

Dimensional drawing	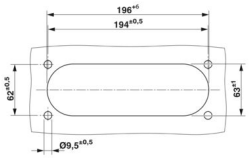
Width	92 mm
Height	14 mm
Length	222 mm
Drill hole distance, horizontal	62 mm
Drill hole distance, vertical	193 mm
Hole diameter	8.5 mm

Material specifications

Color	black (RAL 9005)
Material interior	galvanized sheet steel (Core)
Material exterior	TPE-SEBS (external material)
Flammability rating according to UL 94	V0

Cable/line

External cable diameter 5-7 mm	4x 5 mm ... 7 mm
External cable diameter 8-12 mm	4x 8 mm ... 12 mm
External cable diameter 10-14 mm	12x 10 mm ... 14 mm
External cable diameter 14-20 mm	4x 14 mm ... 20 mm
External cable diameter 20-26 mm	1x 20 mm ... 26 mm

Environmental and real-life conditions

Ambient conditions

Degree of protection	IP65 (Minimum sheet thickness >= 2.5 mm)

Ambient temperature (operation)	-40 °C ... 100 °C

Mounting

Assembly note	M8 mounting screw, torque: 1.5 - 2.0 Nm, SW5 Allen key
	1. Place the multigate in an F21 cutout 2. Install the M8 screws and use M8 nuts if necessary (tightening torque: 1.5 Nm ... 2 Nm) 3. Using a knife or scissors, cut a hole with a diameter 20% smaller than the cable diameter you are using. You can also use a screwdriver (if the cable diameter is greater than 10 mm, use scissors) 4. Push the cable through the membrane from the front 5. Pull the cable back about 20 mm to secure it and ensure it stays in place

Drawings

Dimensional drawing

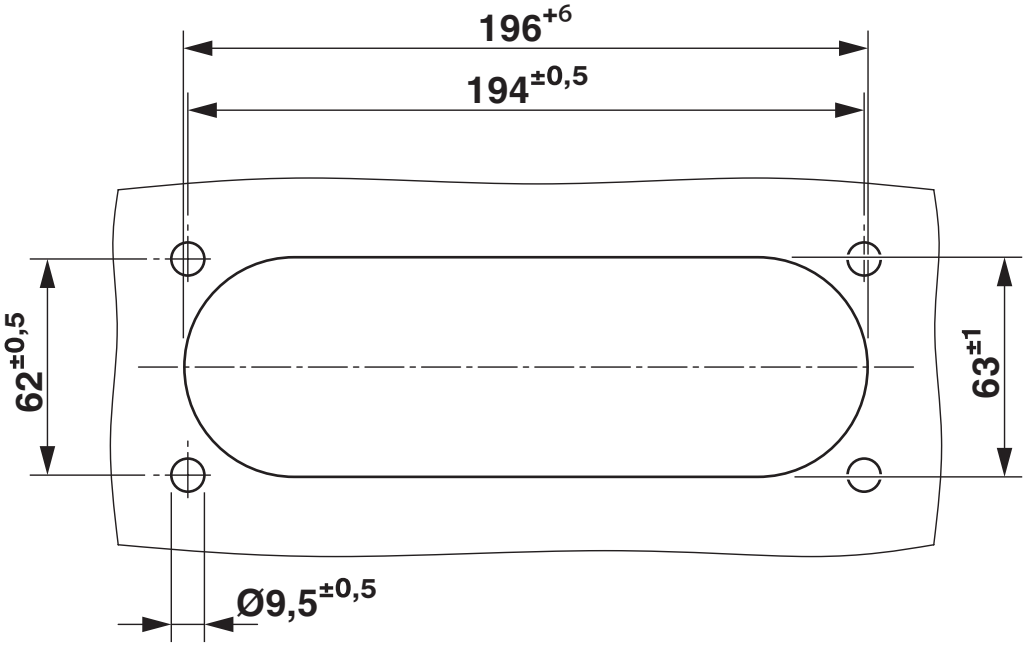

Wall cutout drawing

Dimensional drawing

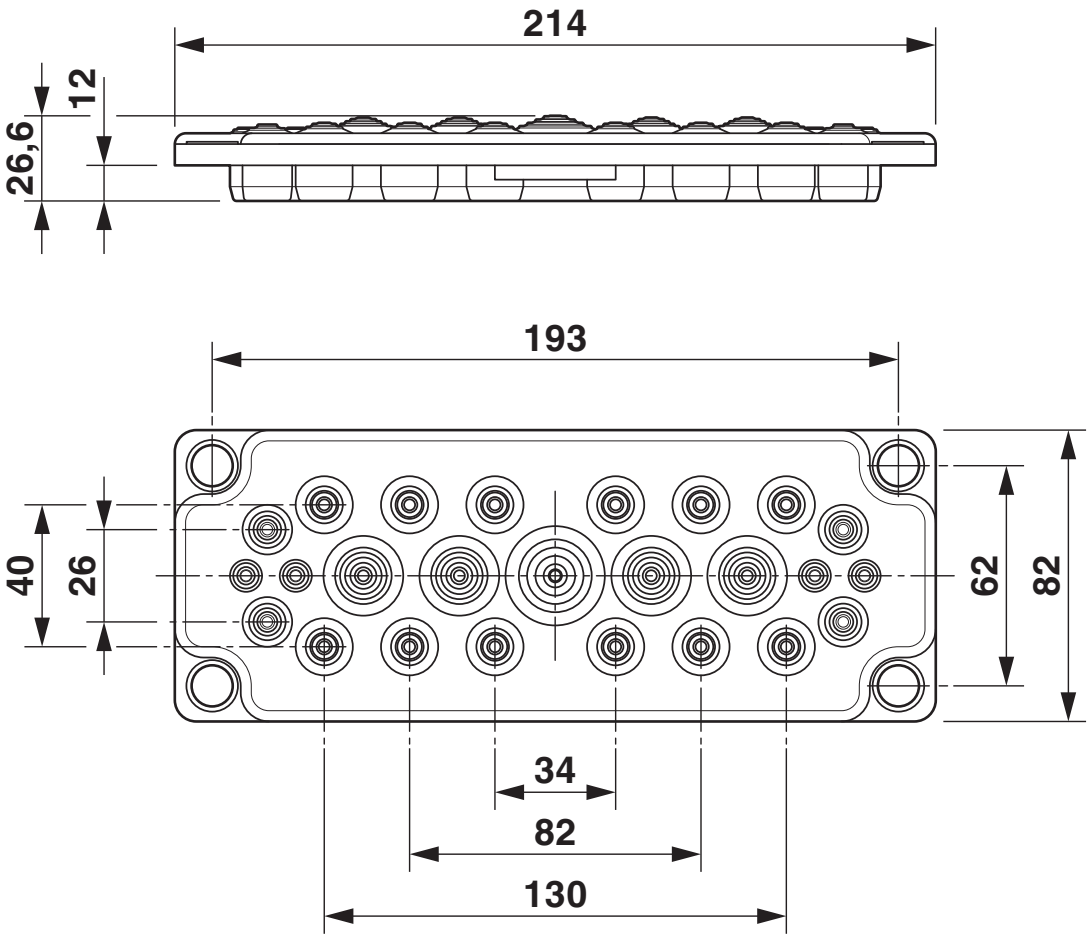

Dimensional drawing

Classifications

ECLASS

ECLASS-15.0	27400569
ECLASS-13.0	27400569

ETIM

ETIM 10.0	EC001004

UNSPSC

UNSPSC 21.0	31163000

Environmental product compliance

EU RoHS

Fulfills EU RoHS substance requirements	Yes, No exemptions

China RoHS

Environment friendly use period (EFUP)	EFUP-E
	No hazardous substances above the limits

EU REACH SVHC

REACH candidate substance (CAS No.)	No substance above 0.1 wt%

EF3.1 Climate Change

CO2e kg	0.782 kg CO2e

Phoenix Contact 2026 © - all rights reserved
https://www.phoenixcontact.com

Phoenix Contact USA
586 Fulling Mill Road
Middletown, PA 17057, United States
(+717) 944-1300
info@phoenixcon.com