SEALING PLUG 28X30 RD - Sealing plug

1421864

https://www.phoenixcontact.com/us/products/1421864

Please be informed that the data shown in this PDF document is generated from our online catalog. Please find the complete data in the user documentation. Our general terms of use for downloads are valid.



Sealing plug, color: red

Commercial data

Item number	1421864
Packing unit	10 pc
Minimum order quantity	10 pc
Sales key	BF68
Product key	AF7DZX
GTIN	4055626287645
Weight per piece (including packing)	11.55 g
Weight per piece (excluding packing)	9 g
Customs tariff number	39235090
Country of origin	DE

Technical data

Product properties

Product type	Sealing plugs

Dimensions

Dimensional drawing	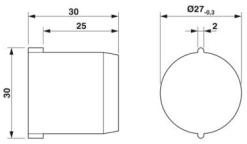
Length	30 mm
Diameter	27 mm

Material specifications

Material	PA

Cable/line

Halogen-free	yes

Environmental and real-life conditions

Ambient conditions

Ambient temperature (operation)	-60 °C ... 100 °C

Mounting

Assembly note	The head of the sealing plug must still be visible after mounting in the screw connection (see “after mounting” photo).

Drawings

Dimensional drawing

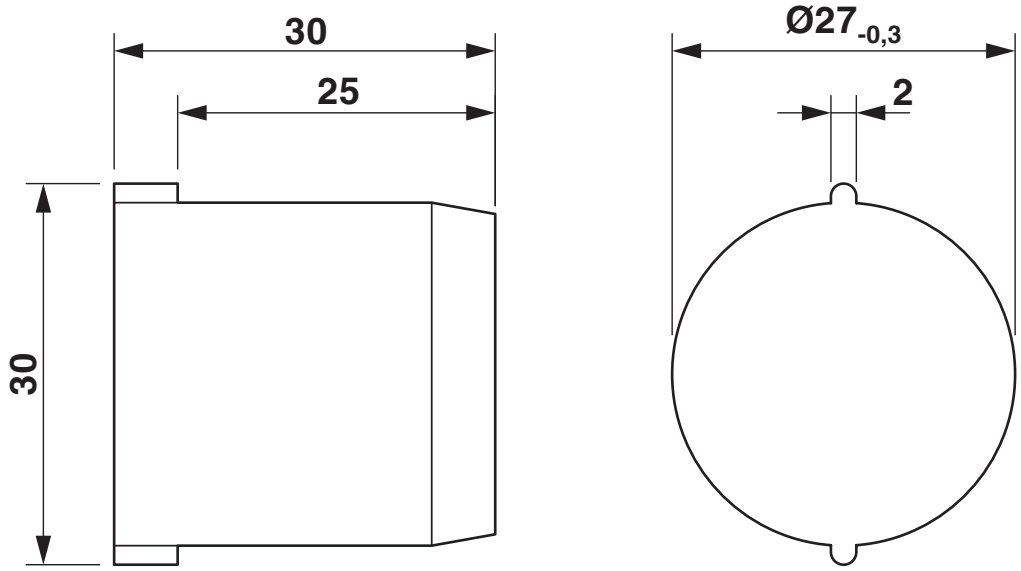

Dimensional drawing

Classifications

ECLASS

ECLASS-13.0	23111190
ECLASS-15.0	27140805

ETIM

ETIM 10.0	EC000032

UNSPSC

UNSPSC 21.0	39121300

Environmental product compliance

EU RoHS

Fulfills EU RoHS substance requirements	Yes, No exemptions

China RoHS

Environment friendly use period (EFUP)	EFUP-E
	No hazardous substances above the limits

EU REACH SVHC

REACH candidate substance (CAS No.)	No substance above 0.1 wt%

EF3.1 Climate Change

CO2e kg	0.079 kg CO2e

Phoenix Contact 2026 © - all rights reserved
https://www.phoenixcontact.com

Phoenix Contact USA
586 Fulling Mill Road
Middletown, PA 17057, United States
(+717) 944-1300
info@phoenixcon.com