HC-EVO-B24-SHFDC-2SSM32-PLRBK - Housing

1421380

https://www.phoenixcontact.com/us/products/1421380

Please be informed that the data shown in this PDF document is generated from our online catalog. Please find the complete data in the user documentation. Our general terms of use for downloads are valid.



Surface mounting housing B24, for double locking latch, material: PA 6.6-FR, protective cover material: PC, cable outlets: 2, lateral, 2x M32, height: 84 mm, cable gland: none, protective cover: yes, Standard, including 2x reducing adapter

Your advantages

- Lower costs than metal version
- Low weight
- Lower risk of condensation

Commercial data

Item number	1421380
Packing unit	1 pc
Minimum order quantity	1 pc
Sales key	BF57
Product key	AF7APL
GTIN	4055626264974
Weight per piece (including packing)	257.1 g
Weight per piece (excluding packing)	257.1 g
Customs tariff number	85389099
Country of origin	PL

Technical data

Notes

General	For contact inserts HC-B24, BB46, D64, DD108, M, K, HV10-I-PT, HV 10-E...C

Product properties

Product type	Housing with locking latch
Housing type	Surface mounting housing
Product family	HC-EVO-B
Application	Standard
Type	B24
No. of cable outlets	2
Type of the screw connection	2x M32
Protective cover	yes
Cable outlet	lateral
Pg screw connection	none

Dimensions

Dimensional drawing	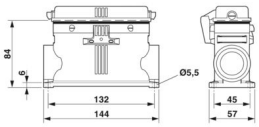
Width	57 mm
Height	84 mm
Length	144 mm
Hole diameter	5.5 mm

Material specifications

Flammability rating according to UL 94	V0 (Housing)
	V0 (Protective cover)
Seal material	NBR (profile gasket)
Housing material	PA 6.6-FR
Material, protective cover	PC

Mechanical properties

Mechanical data

Type of the screw connection	2x M32
Locking type	Pin

Connection data

Tightening torque	2 Nm ... 3 Nm (for M5 mounting screws on the surface-mount housing)

Mounting

Assembly note	Two plastic reductions M40 to M32 are provided
	One of the two openings for the screw connections is sealed but can be broken open using a screwdriver.

Environmental and real-life conditions

Ambient conditions

Degree of protection	IP66 (when plugged in)
	IP54 (with closed protective cover)
Enclosure rating (NEMA)	12 (UL 50e)
Impact strength	IK09
Ambient temperature (operation)	-40 °C ... 125 °C

Drawings

Dimensional drawing

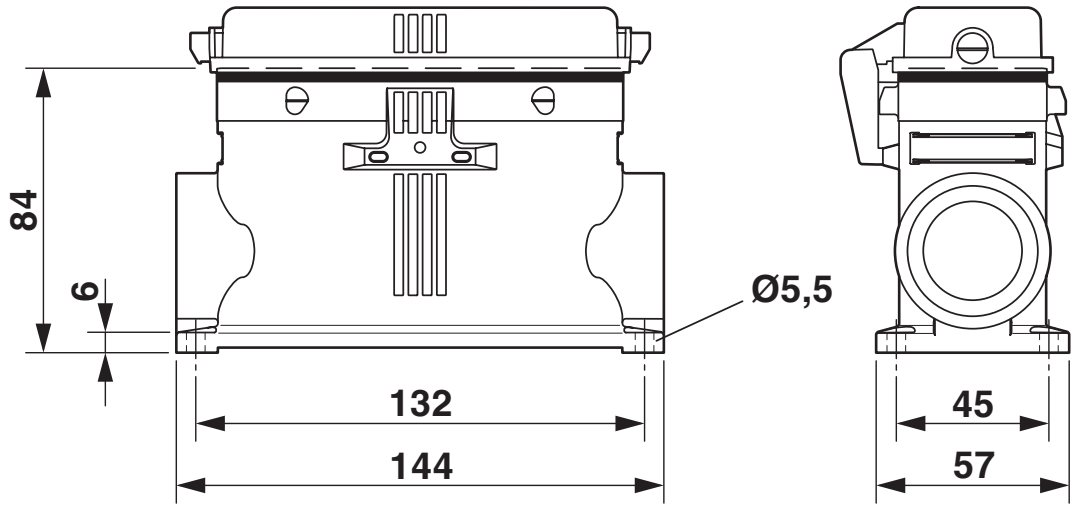

Dimensional drawing

Approvals

To download certificates, visit the product detail page: https://www.phoenixcontact.com/us/products/1421380

DNV
Approval ID: TAE000037S

EAC
Approval ID: RU C-DE.AI30.B.01102

cUL Recognized
Approval ID: E255026

UL Recognized
Approval ID: E255026

Classifications

ECLASS

ECLASS-13.0	27440202
ECLASS-15.0	27440202

ETIM

ETIM 10.0	EC000437

UNSPSC

UNSPSC 21.0	31261500

Environmental product compliance

EU RoHS

Fulfills EU RoHS substance requirements	Yes, No exemptions

China RoHS

Environment friendly use period (EFUP)	EFUP-E
	No hazardous substances above the limits

EU REACH SVHC

REACH candidate substance (CAS No.)	No substance above 0.1 wt%

Phoenix Contact 2026 © - all rights reserved
https://www.phoenixcontact.com

Phoenix Contact USA
586 Fulling Mill Road
Middletown, PA 17057, United States
(+717) 944-1300
info@phoenixcon.com