HC-EVO-B16-HLFD-PLBK - Housing

1420932

https://www.phoenixcontact.com/us/products/1420932

Please be informed that the data shown in this PDF document is generated from our online catalog. Please find the complete data in the user documentation. Our general terms of use for downloads are valid.



Sleeve housing B16, for double locking latch, material: PA 6.6-FR, cable outlets: 1, straight/lateral, height: 63 mm, cable gland: none, Standard

Your advantages

- Flexible cable outlet direction, lateral or straight
- Lower costs than metal version
- Low weight
- Lower risk of condensation

Commercial data

Item number	1420932
Packing unit	1 pc
Minimum order quantity	1 pc
Sales key	BF57
Product key	AF7APL
GTIN	4055626249315
Weight per piece (including packing)	90 g
Weight per piece (excluding packing)	86.71 g
Customs tariff number	85389099
Country of origin	PL

Technical data

Notes

General	For contact inserts HC-B16, BB32, D40, DD72, HS6, HV6, M, K

Product properties

Product type	Housing with locking latch
Housing type	Sleeve housing
Product family	HC-EVO-B
Application	Standard
Type	B16
No. of cable outlets	1
Shielded	no
Cable outlet	straight
Pg screw connection	none

Dimensions

Dimensional drawing	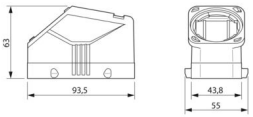
Width	43.8 mm
Height	63 mm
Length	93.5 mm

Material specifications

Flammability rating according to UL 94	V0 (Housing)
Housing material	PA 6.6-FR

Mechanical properties

Mechanical data

Locking type	Pin

Mounting

Assembly note	The sleeve base housing must be supplemented with the EVO screw connection. The EVO screw connection is available in 4 sizes. It enables the creation of a straight or a lateral cable outlet. The EVO screw connection is assembled by hand or using a pipe wrench.

Environmental and real-life conditions

Ambient conditions

Degree of protection	IP66

Enclosure rating (NEMA)	12 (UL 50e)
Impact strength	IK09
Ambient temperature (operation)	-40 °C ... 125 °C

Drawings

Dimensional drawing

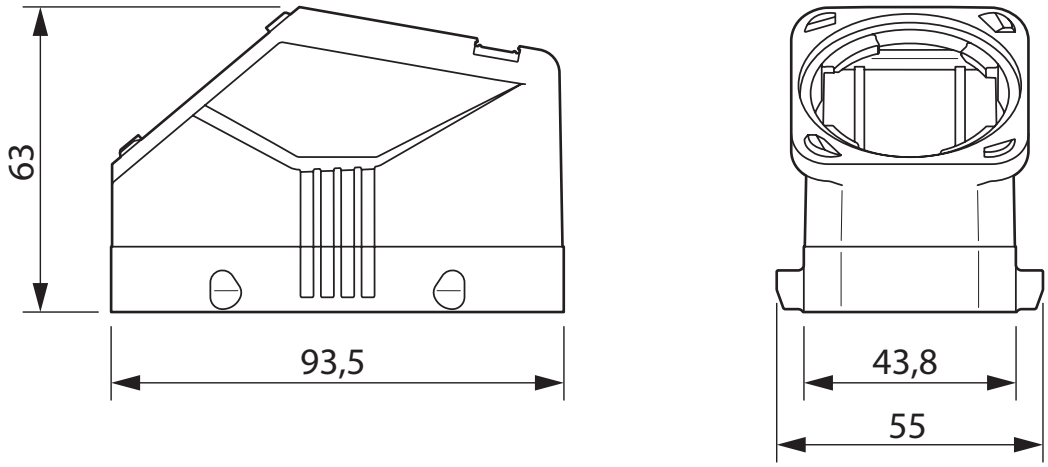

Dimensional drawing

Approvals

To download certificates, visit the product detail page: https://www.phoenixcontact.com/us/products/1420932

DNV
Approval ID: TAE000037S

cUL Recognized
Approval ID: E255026

UL Recognized
Approval ID: E255026

EAC
Approval ID: RU C-DE.AI30.B.01102

Classifications

ECLASS

ECLASS-13.0	27440202
ECLASS-15.0	27440202

ETIM

ETIM 10.0	EC000437

UNSPSC

UNSPSC 21.0	31261500

Environmental product compliance

EU RoHS

Fulfills EU RoHS substance requirements	Yes, No exemptions

China RoHS

Environment friendly use period (EFUP)	EFUP-E
	No hazardous substances above the limits

EU REACH SVHC

REACH candidate substance (CAS No.)	No substance above 0.1 wt%

Phoenix Contact 2026 © - all rights reserved
https://www.phoenixcontact.com

Phoenix Contact USA
586 Fulling Mill Road
Middletown, PA 17057, United States
(+717) 944-1300
info@phoenixcon.com