# HC-ADV-B06-HLWH-1TTM25-MF-BK - Housing

1420905

https://www.phoenixcontact.com/us/products/1420905

Please be informed that the data shown in this PDF document is generated from our online catalog. Please find the complete data in the user documentation. Our general terms of use for downloads are valid.



Sleeve housing B6, with screw locking, material: Die-cast aluminum, salt water resistant, cable outlets: 1, straight, 1x M25, height: 74 mm, cable gland: none, increased environmental requirements

## Commercial data

| | |
|---|---|
| Item number | 1420905 |
| Packing unit | 1 pc |
| Minimum order quantity | 1 pc |
| Sales key | BF58 |
| Product key | AF7API |
| GTIN | 4055626249049 |
| Weight per piece (including packing) | 211 g |
| Weight per piece (excluding packing) | 22.22 g |
| Customs tariff number | 85389099 |
| Country of origin | CN |

## Technical data

### Notes

| | |
|---|---|
| General | For contact inserts HC-B6, BB10, DD24, M |

### Product properties

| | |
|---|---|
| Product type | Housing with screw locking |
| Housing type | Sleeve housing |
| Product family | HC-ADV |
| Application | increased environmental requirements |
| Type | B6 |
| No. of cable outlets | 1 |
| Type of the screw connection | 1x M25 |
| Fixing screws | M6 (screw head: 5 mm Allen screw) |
| Shielded | no |
| Cable outlet | straight |
| Pg screw connection | none |

### Connection data

| | |
|---|---|
| Tightening torque | 3 Nm ... 5 Nm (for M6 mounting screws on the sleeve housing) |

### Dimensions

| | |
|---|---|
| Dimensional drawing | 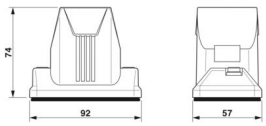 |
| Width | 57 mm |
| Height | 74 mm |
| Length | 92 mm |

Installation dimensions

| | |
|---|---|
| Width of the assembly cutout | 35 mm |
| Length of the assembly cutout | 52 mm |

### Material specifications

| | |
|---|---|
| Seal material | Viton |
| Housing material | Die-cast aluminum, salt water resistant |
| Housing surface material | Powder-coated, black |
| Locking latch material | Stainless steel |

### Environmental and real-life conditions

Ambient conditions

| | |
|---|---|
| | IP66 |

| | |
|---|---|
| Degree of protection | IP68 (0.2 bar/24 h) |
| | IP69 (ISO 20653:2013-02) |
| Enclosure rating (NEMA) | 4 (UL 50e) |
| | 4X (UL 50e) |
| | 12 (UL 50e) |
| Impact strength | IK09 |
| Ambient temperature (operation) | -40 °C ... 125 °C |

## Mechanical properties

Mechanical data

| | |
|---|---|
| Type of the screw connection | 1x M25 |
| Locking type | Screw |

## Mounting

| | |
|---|---|
| Fixing screws | M6 (screw head: 5 mm Allen screw) |

## Drawings

Dimensional drawing

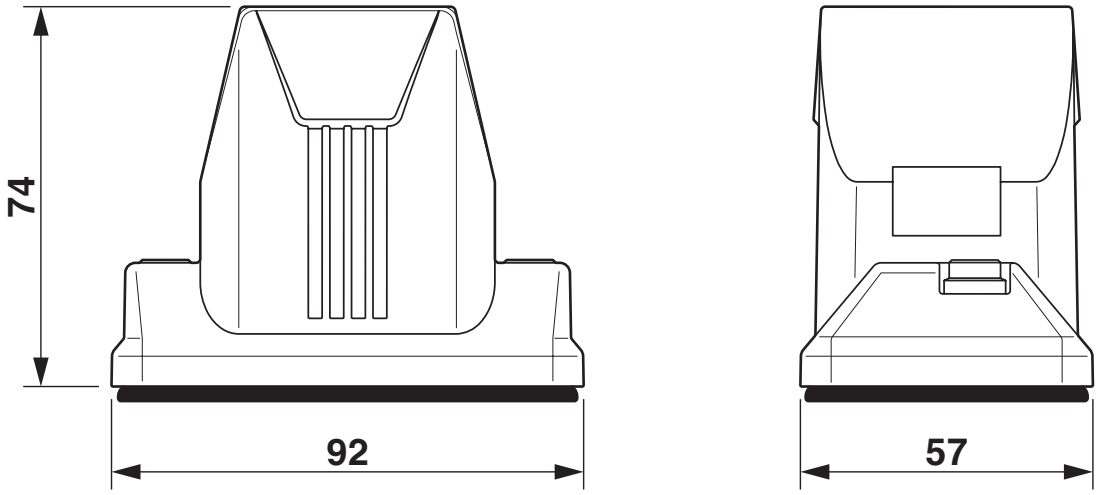


Dimensional drawing

Dimensional drawing

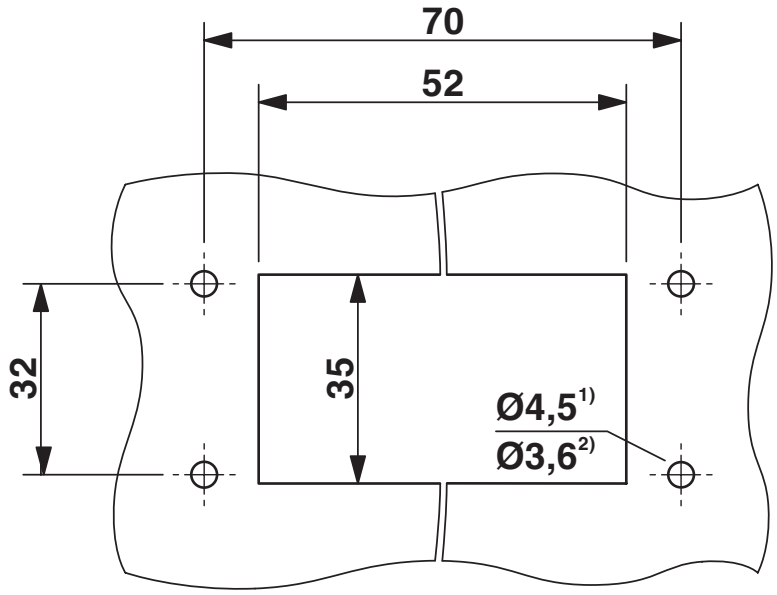


Mounting cutout
1) when M4 screws are used
2) when self-tapping Torx® screws are used (Torx® 20, M4)

## Approvals

To download certificates, visit the product detail page: https://www.phoenixcontact.com/us/products/1420905

**DNV**
Approval ID: TAE000037S

**cUL Recognized**
Approval ID: E255026

**UL Recognized**
Approval ID: E255026

**EAC**
Approval ID: RU C-DE.AI30.B.01102

## Classifications

### ECLASS

| | |
|---|---|
| ECLASS-13.0 | 27440202 |
| ECLASS-15.0 | 27440202 |

### ETIM

| | |
|---|---|
| ETIM 10.0 | EC000437 |

### UNSPSC

| | |
|---|---|
| UNSPSC 21.0 | 31261500 |

## Environmental product compliance

EU RoHS

| | |
|---|---|
| Fulfills EU RoHS substance requirements | Yes, No exemptions |

China RoHS

| | |
|---|---|
| Environment friendly use period (EFUP) | EFUP-E |
| | No hazardous substances above the limits |

EU REACH SVHC

| | |
|---|---|
| REACH candidate substance (CAS No.) | No substance above 0.1 wt% |

EF3.1 Climate Change

| | |
|---|---|
| CO2e kg | 2.729 kg CO2e |


Phoenix Contact 2026 © - all rights reserved
https://www.phoenixcontact.com



Phoenix Contact USA
586 Fulling Mill Road
Middletown, PA 17057, United States
(+717) 944-1300
info@phoenixcon.com