VS-FSDB-IP20SDA/981/2,0 SCO - Patch cable

1420171

https://www.phoenixcontact.com/us/products/1420171

Please be informed that the data shown in this PDF document is generated from our online catalog. Please find the complete data in the user documentation. Our general terms of use for downloads are valid.



Assembled USB cable, shielded, color: black, PVC outer sheath, USB mini-B/IP20 on USB type A/IP20, length: 2 m

Commercial data

Item number	1420171
Packing unit	1 pc
Minimum order quantity	1 pc
Sales key	BF04
Product key	AF1CPA
GTIN	4046356548601
Weight per piece (including packing)	110.4 g
Weight per piece (excluding packing)	108 g
Customs tariff number	85444290
Country of origin	PL

Technical data

Notes

Trade restriction

CE note	The products are offered exclusively for export outside the EU and the European Economic Area.

Product properties

Product type	Data cable preassembled
Application	Standard
Number of positions	4
Shielded	yes

Electrical properties

Nominal voltage U_N	48 V AC
	60 V DC
Nominal current I_N	1 A
Transmission medium	Copper
Transmission characteristics (category)	USB 2.0

Mechanical properties

Mechanical data

Insertion/withdrawal cycles	≥ 100

Material specifications

Flammability rating according to UL 94	V0

Connection data

Connection assignment

Contact | Color (signal designation) | Contact (optional)	1 (M12 mini B) | RD (+5 V) | 1 (USB type A)
	2 (M12 mini B) | WH (DATA-) | 2 (USB type A)
	3 (M12 mini B) | GN (DATA+) | 3 (USB type A)
	4 (M12 mini B) | N.C.
	5 (M12 mini B) | BK (GND) | 4 (USB type A)

Connector

Connection 1

Type	Plug straight USB type A / IP20
Degree of protection	IP20

Connection 2

Type	Socket straight M12 mini B / IP65
Material	Cu alloy

	Ni/Au
Degree of protection	IP65

Cable/line

Cable length	2 m
External sheath, color	black
Ambient temperature (operation)	-25 °C ... 80 °C (Cable, flexible installation)

Environmental and real-life conditions

Ambient conditions

Degree of protection	IP20 (USB type A)
	IP65 (M12 mini B)
Ambient temperature (operation) (Cable, flexible installation)	-25 °C ... 80 °C (Cable, flexible installation)

Drawings

Dimensional drawing

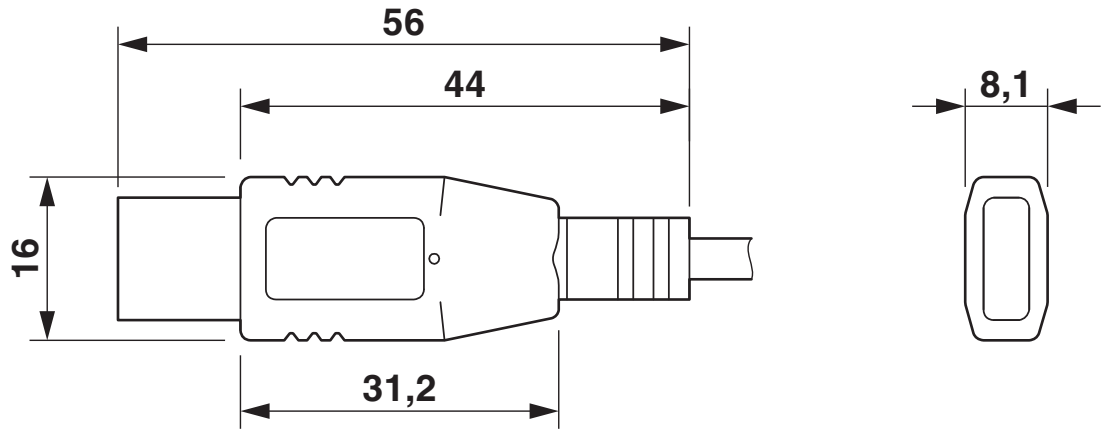

USB connector, type A, Standard

Dimensional drawing

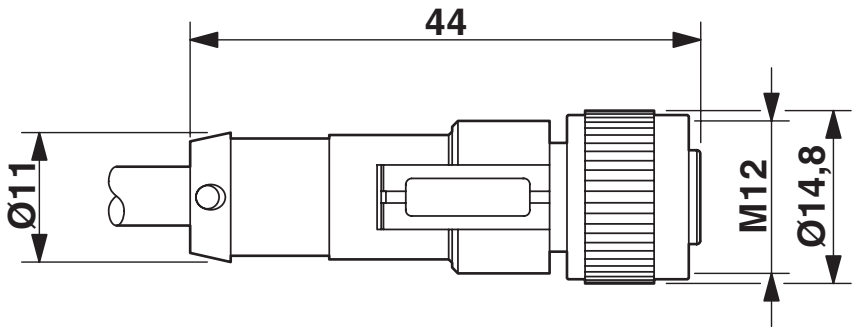

Mini USB, M12 x 1 socket, straight

Schematic diagram

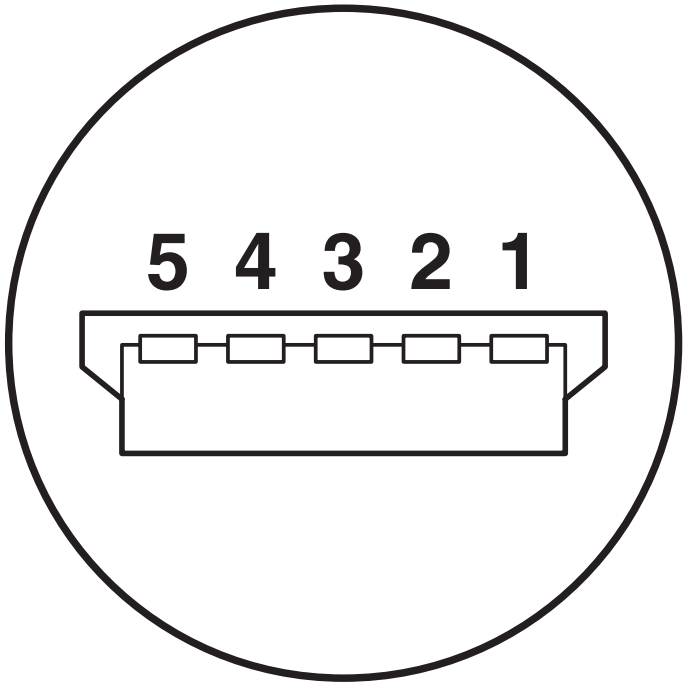

Pin assignment plug USB, mini B

Approvals

To download certificates, visit the product detail page: https://www.phoenixcontact.com/us/products/1420171

EAC-RoHS
Approval ID: RU D-DE.HB35.B.00387

Classifications

ECLASS

ECLASS-13.0	27060307
ECLASS-15.0	27060307

ETIM

ETIM 10.0	EC002599

UNSPSC

UNSPSC 21.0	26121600

Environmental product compliance

EU RoHS

Fulfills EU RoHS substance requirements	Yes, No exemptions

China RoHS

Environment friendly use period (EFUP)	EFUP-E
	No hazardous substances above the limits

EU REACH SVHC

REACH candidate substance (CAS No.)	No substance above 0.1 wt%

EF3.1 Climate Change

CO2e kg	1.72 kg CO2e

Phoenix Contact 2026 © - all rights reserved
https://www.phoenixcontact.com

Phoenix Contact USA
586 Fulling Mill Road
Middletown, PA 17057, United States
(+717) 944-1300
info@phoenixcon.com