HC-STA-B24-HLFD-BLANK-EL-AL - Housing

1420010

https://www.phoenixcontact.com/us/products/1420010

Please be informed that the data shown in this PDF document is generated from our online catalog. Please find the complete data in the user documentation. Our general terms of use for downloads are valid.



Sleeve housing B24, for double locking latch, material: Die-cast aluminum, salt water resistant, variable, height: 60 mm, cable gland: none, Standard, Without thread opening for screw connection

Product description

Sleeve housing, without screw thread

Your advantages

- Good shielding in the event of electromagnetic interference

Commercial data

Item number	1420010
Packing unit	1 pc
Minimum order quantity	1 pc
Sales key	BF56
Product key	AF7APB
GTIN	4055626201368
Weight per piece (including packing)	252.4 g
Weight per piece (excluding packing)	252.4 g
Customs tariff number	85389099
Country of origin	CN

Technical data

Notes

General	for contact inserts HC-B24, BB46, D64, DD108, HV10/16, M

Product properties

Product type	Housing with locking latch
Housing type	Sleeve housing
Application	Standard
Type	B24
Cable outlet	variable
Pg screw connection	none

Dimensions

Dimensional drawing	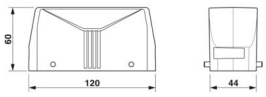
Width	44 mm
Height	60 mm
Length	120 mm

Material specifications

Housing material	Die-cast aluminum, salt water resistant
Housing surface material	uncoated

Mechanical properties

Mechanical data

Locking type	Pin

Environmental and real-life conditions

Ambient conditions

Degree of protection	IP66
	IP67
Enclosure rating (NEMA)	4 (UL 50e)
	4X (UL 50e)
	12 (UL 50e)
Impact strength	IK09
Ambient temperature (operation)	-40 °C ... 125 °C

Drawings

Dimensional drawing

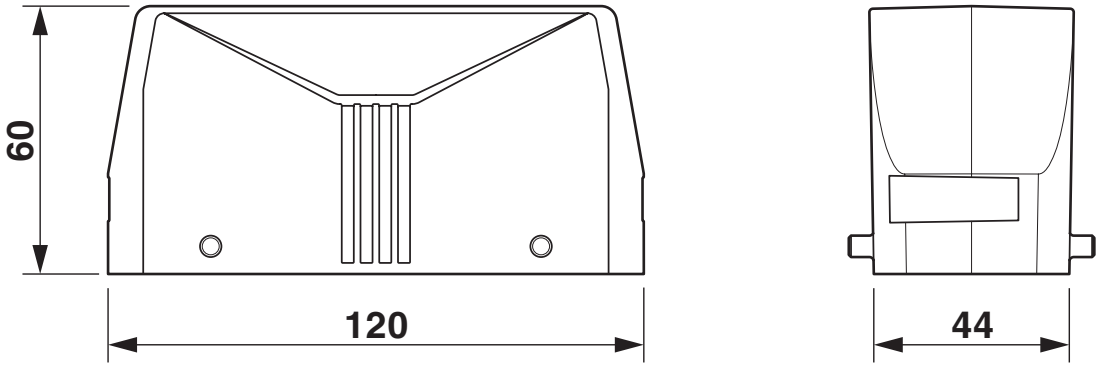

Dimensional drawing

Approvals

To download certificates, visit the product detail page: https://www.phoenixcontact.com/us/products/1420010

DNV
Approval ID: TAE000037S

EAC
Approval ID: RU C-DE.AI30.B.01102

Classifications

ECLASS

ECLASS-13.0	27440202
ECLASS-15.0	27440202

ETIM

ETIM 10.0	EC000437

UNSPSC

UNSPSC 21.0	31261500

Environmental product compliance

EU RoHS

Fulfills EU RoHS substance requirements	Yes, No exemptions

China RoHS

Environment friendly use period (EFUP)	EFUP-E
	No hazardous substances above the limits

EU REACH SVHC

REACH candidate substance (CAS No.)	No substance above 0.1 wt%

EF3.1 Climate Change

CO2e kg	4.4 kg CO2e

Phoenix Contact 2026 © - all rights reserved
https://www.phoenixcontact.com

Phoenix Contact USA
586 Fulling Mill Road
Middletown, PA 17057, United States
(+717) 944-1300
info@phoenixcon.com