CUC-DST-GZNI-S/DSSC25 - D-SUB sleeve housings

1419727

https://www.phoenixcontact.com/us/products/1419727

Please be informed that the data shown in this PDF document is generated from our online catalog. Please find the complete data in the user documentation. Our general terms of use for downloads are valid.



D-SUB sleeve housings, D-SUB, material: Die-cast zinc, degree of protection: IP20, housing size: 3, color: Bare metallic

Your advantages

- Easy to mount thanks to preassembled locking screws
- Angled conductor entry
- Antimagnetic plastic housing

Commercial data

Item number	1419727
Packing unit	1 pc
Minimum order quantity	1 pc
Sales key	AB19
Product key	ABNCAE
GTIN	4055626188058
Weight per piece (including packing)	74.6 g
Weight per piece (excluding packing)	72.45 g
Customs tariff number	85389099
Country of origin	DE

Technical data

Product properties

Product type	Sleeve housings
Type	D-SUB
No. of cable outlets	1
Cable outlet	straight

Connection data

Screw thread	4-40 UNC

Dimensions

Width	53.7 mm
Height	15.2 mm
Depth	70 mm

Material specifications

Color	Bare metallic
Flammability rating according to UL 94	V0
Housing material	Die-cast zinc
Housing surface material	nickel-plated

Cable/line

External cable diameter	3 mm ... 8.5 mm (Without bending protection)

Environmental and real-life conditions

Ambient conditions

Degree of protection	IP20
Ambient temperature (operation)	-35 °C ... 100 °C

Mounting

Mounting type	Screw locking mechanism

Drawings

Schematic diagram

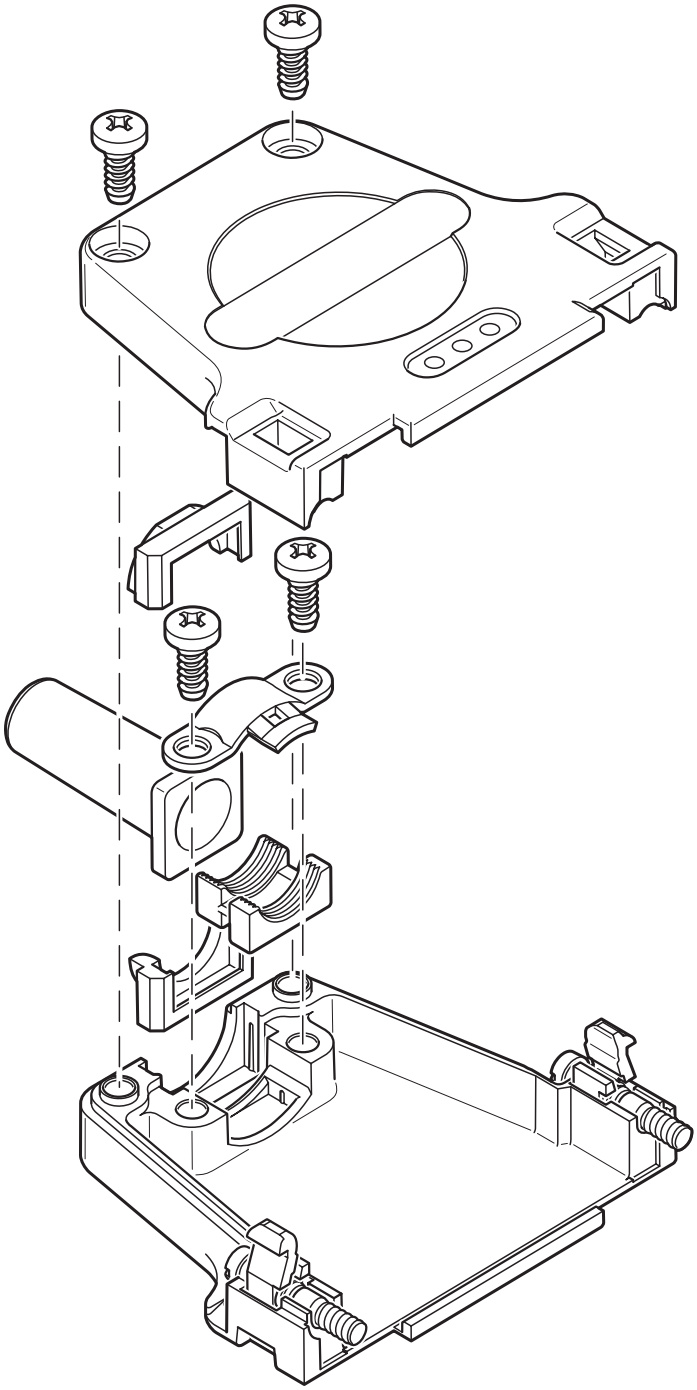

Classifications

ECLASS

ECLASS-13.0	27440202
ECLASS-15.0	27440202

ETIM

ETIM 10.0	EC000437

UNSPSC

UNSPSC 21.0	31261500

Environmental product compliance

EU RoHS

Fulfills EU RoHS substance requirements	Yes
Exemption	6(a)

China RoHS

Environment friendly use period (EFUP)	EFUP-50
	An article-related China RoHS declaration table can be found in the download area for the respective article under "Manufacturer declaration". For all articles with EFUP-E, no China RoHS declaration table issued and required.

EU REACH SVHC

REACH candidate substance (CAS No.)	Lead(CAS: 7439-92-1)
SCIP	eb5a2c4e-7e46-4534-b266-21cd5fe90dfc

EF3.1 Climate Change

CO2e kg	0.653 kg CO2e

Phoenix Contact 2026 © - all rights reserved
https://www.phoenixcontact.com

Phoenix Contact USA
586 Fulling Mill Road
Middletown, PA 17057, United States
(+717) 944-1300
info@phoenixcon.com