HC-STA-D07-CHPWS-1TGM20-EL-AL - Housing

1419242

https://www.phoenixcontact.com/us/products/1419242

Please be informed that the data shown in this PDF document is generated from our online catalog. Please find the complete data in the user documentation. Our general terms of use for downloads are valid.



Feed-through header D7, with single locking latch, material: Die-cast aluminum, salt water resistant, cable outlets: 1, straight, 1x M20, height: 60.5 mm, cable gland: none, Standard

Commercial data

Item number	1419242
Packing unit	1 pc
Minimum order quantity	1 pc
Sales key	BF56
Product key	AF7APF
GTIN	4055626159881
Weight per piece (including packing)	46.9 g
Weight per piece (excluding packing)	46.9 g
Customs tariff number	85389099
Country of origin	CN

Technical data

Notes

General	for contact inserts HC-A03, A04, D07, D08, Q02, Q03, Q04, Q05, Q07, Q12

Product properties

Product type	Housing with locking latch
Housing type	Feed-through header
Product family	HC-STA-D07
Series	HC-D
Application	Standard
Type	D7
No. of cable outlets	1
Type of the screw connection	1x M20
Shielded	no
Cable outlet	straight
Pg screw connection	none

Dimensions

Dimensional drawing	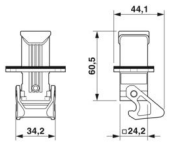
Width	26.5 mm
Height	60.5 mm
Length	26.5 mm
Drill hole distance, horizontal	44 mm
Hole diameter	3.2 mm

Installation dimensions

Width of the assembly cutout	26.5 mm
Length of the assembly cutout	26.5 mm

Material specifications

Flammability rating according to UL 94	V0 (Interlock)
Seal material	NBR, conductive
Housing material	Die-cast aluminum, salt water resistant
Housing surface material	uncoated
Locking latch material	PA

Mechanical properties

Mechanical data

Type of the screw connection	1x M20
Locking type	Latch

Connection data

Tightening torque	0.5 Nm ... 0.8 Nm

Environmental and real-life conditions

Ambient conditions

Degree of protection	IP66
	IP67
Enclosure rating (NEMA)	4 (UL 50e)
	4X (UL 50e)
Impact strength	IK06
Ambient temperature (operation)	-40 °C ... 125 °C

Drawings

Dimensional drawing

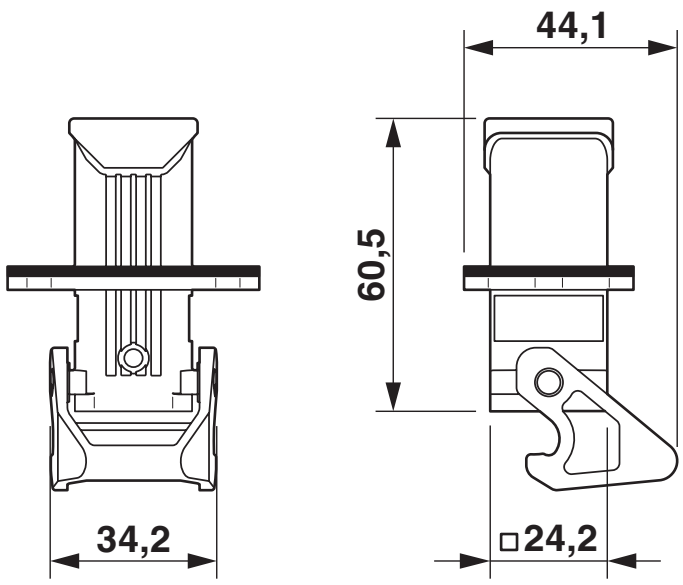

Dimensional drawing

Dimensional drawing

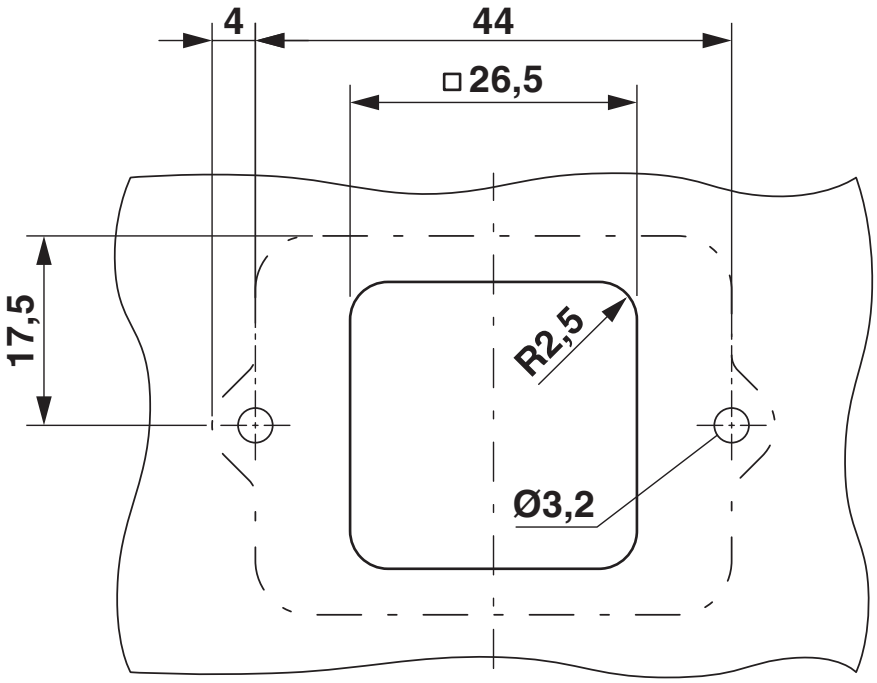

Mounting cutout

Approvals

To download certificates, visit the product detail page: https://www.phoenixcontact.com/us/products/1419242

DNV
Approval ID: TAE000037S

cUL Recognized
Approval ID: E255026

UL Recognized
Approval ID: E255026

Classifications

ECLASS

ECLASS-13.0	27440202
ECLASS-15.0	27440202

ETIM

ETIM 10.0	EC000437

UNSPSC

UNSPSC 21.0	31261500

Environmental product compliance

EU RoHS

Fulfills EU RoHS substance requirements	Yes, No exemptions

China RoHS

Environment friendly use period (EFUP)	EFUP-E
	No hazardous substances above the limits

EU REACH SVHC

REACH candidate substance (CAS No.)	No substance above 0.1 wt%

Phoenix Contact 2026 © - all rights reserved
https://www.phoenixcontact.com

Phoenix Contact USA
586 Fulling Mill Road
Middletown, PA 17057, United States
(+717) 944-1300
info@phoenixcon.com