# HC-STA-D07-HHFS-1STM25-EL-AL - Housing

1419236

https://www.phoenixcontact.com/us/products/1419236

Please be informed that the data shown in this PDF document is generated from our online catalog. Please find the complete data in the user documentation. Our general terms of use for downloads are valid.



Sleeve housing D7, for single locking latch, material: Die-cast aluminum, salt water resistant, cable outlets: 1, lateral, 1x M25, height: 52.8 mm, cable gland: none, Standard

## Commercial data

| | |
|---|---|
| Item number | 1419236 |
| Packing unit | 1 pc |
| Minimum order quantity | 1 pc |
| Sales key | BF56 |
| Product key | AF7APF |
| GTIN | 4055626159690 |
| Weight per piece (including packing) | 30.8 g |
| Weight per piece (excluding packing) | 30.3 g |
| Customs tariff number | 85389099 |
| Country of origin | CN |

## Technical data

### Notes

| | |
|---|---|
| General | for contact inserts HC-A03, A04, D07, D08, Q02, Q03, Q04, Q05, Q07, Q12 |

### Product properties

| | |
|---|---|
| Product type | Housing with locking latch |
| Housing type | Sleeve housing |
| Product family | HC-STA-D07 |
| Application | Standard |
| Type | D7 |
| No. of cable outlets | 1 |
| Type of the screw connection | 1x M25 |
| Shielded | no |
| Cable outlet | lateral |
| Pg screw connection | none |

### Dimensions

| | |
|---|---|
| Dimensional drawing | 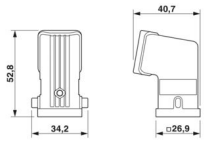 |
| Width | 40.7 mm |
| Height | 52.8 mm |
| Length | 26.9 mm |

### Material specifications

| | |
|---|---|
| Housing material | Die-cast aluminum, salt water resistant |
| Housing surface material | uncoated |

### Mechanical properties

Mechanical data

| | |
|---|---|
| Type of the screw connection | 1x M25 |
| Locking type | Pin |

### Environmental and real-life conditions

Ambient conditions

| | |
|---|---|
| Degree of protection | IP66 |
| | IP67 |
| Enclosure rating (NEMA) | 4 (UL 50e) |
| | 4X (UL 50e) |

| | |
|---|---|
| Impact strength | IK06 |
| Ambient temperature (operation) | -40 °C ... 125 °C |

## Drawings

Dimensional drawing

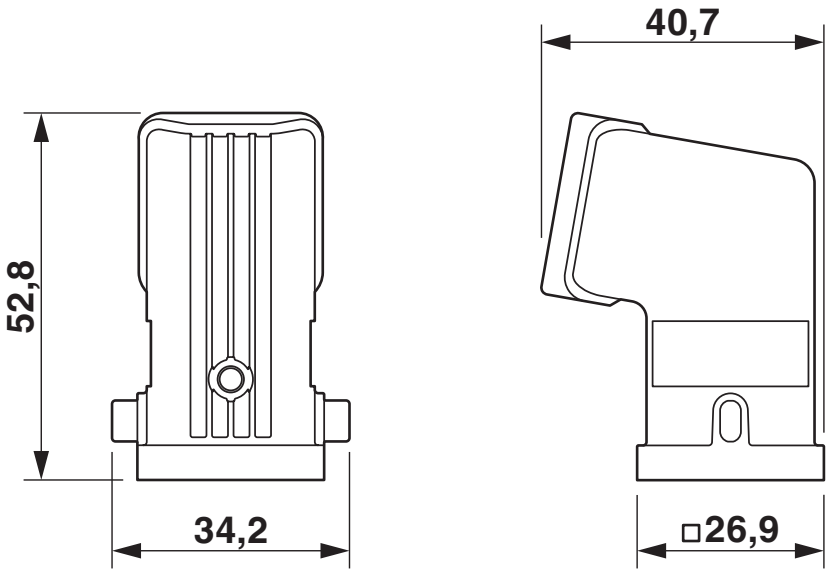


Dimensional drawing

## Approvals

To download certificates, visit the product detail page: https://www.phoenixcontact.com/us/products/1419236

**DNV**
Approval ID: TAE000037S

**cUL Recognized**
Approval ID: E255026

**UL Recognized**
Approval ID: E255026

## Classifications

### ECLASS

| | |
|---|---|
| ECLASS-13.0 | 27440202 |
| ECLASS-15.0 | 27440202 |

### ETIM

| | |
|---|---|
| ETIM 10.0 | EC000437 |

### UNSPSC

| | |
|---|---|
| UNSPSC 21.0 | 31261500 |

## Environmental product compliance

EU RoHS

| | |
|---|---|
| Fulfills EU RoHS substance requirements | Yes, No exemptions |

China RoHS

| | |
|---|---|
| Environment friendly use period (EFUP) | EFUP-E |
| | No hazardous substances above the limits |

EU REACH SVHC

| | |
|---|---|
| REACH candidate substance (CAS No.) | No substance above 0.1 wt% |


Phoenix Contact 2026 © - all rights reserved
https://www.phoenixcontact.com



Phoenix Contact USA
586 Fulling Mill Road
Middletown, PA 17057, United States
(+717) 944-1300
info@phoenixcon.com