HC-M-02-EMC-F - Contact insert module

1417376

https://www.phoenixcontact.com/us/products/1417376

Please be informed that the data shown in this PDF document is generated from our online catalog. Please find the complete data in the user documentation. Our general terms of use for downloads are valid.



Contact insert module, number of positions: 2, Socket, Crimp connection, 48 V, 10 A, 0.14 mm^2 . .. 2.5 mm^2, application: Data/signal, for using two EMC connectors (female connector), number of positions: 1, 4, 8

Commercial data

Item number	1417376
Packing unit	2 pc
Minimum order quantity	2 pc
Sales key	BF62
Product key	AF7ACE
GTIN	4055626112572
Weight per piece (including packing)	13.925 g
Weight per piece (excluding packing)	13.25 g
Customs tariff number	85389099
Country of origin	PL

Technical data

Notes

General	For HEAVYCON housing type B6 to B48, HC-M-B...MF-... module carrier frame required
General	Connectors may be operated only when there is no load/voltage.

Product properties

Product type	EMC insert, modular
Series	HC-M-EMV
Application	Data/signal
Number of positions	2
Connection profile	2
Contact numbering	1 - 2
No. of cable outlets	2
Number of module slots	2
Number of slots	2
Contact material type	turned
	rolled
Shielded	no

Insulation characteristics

Overvoltage category	III
Degree of pollution	3

Electrical properties

Rated voltage (III/3)	48 V
Rated surge voltage	0.8 kV
Rated current	10 A

Connection data

Connection technology

Connection technology	Crimp connection

Conductor connection

Conductor cross-section	0.14 mm² ... 2.5 mm²

Dimensions

Dimensional drawing	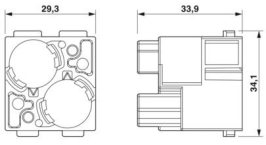
Width	34.2 mm

Height	34 mm
Length	29.4 mm

Mechanical characteristics

Minimum housing height	72 mm
Contact diameter	1.6 mm

Material specifications

Material Line conductor	Zinc alloy
Flammability rating according to UL 94	V0
Contact material	Copper alloy
Contact surface material	Ag (power)/Au (signal)
Contact carrier material	PC

Mechanical properties

Mechanical data

Insertion/withdrawal cycles	≥ 500

Environmental and real-life conditions

Ambient conditions

Ambient temperature (operation)	-40 °C ... 125 °C

Standards and regulations

Standards/regulations	PC: Fire protection in rail vehicles - requirement sets R22, R23, and R24 acc. to DIN EN 45545-2 (Risk level HL1 - HL3)

Mounting

Assembly note	To ensure correct use, installation in housing with IP54 protection or better is required
	Plastic module for the HC-M-EMV-BU/3-9.5 EMC connector

Drawings

Dimensional drawing

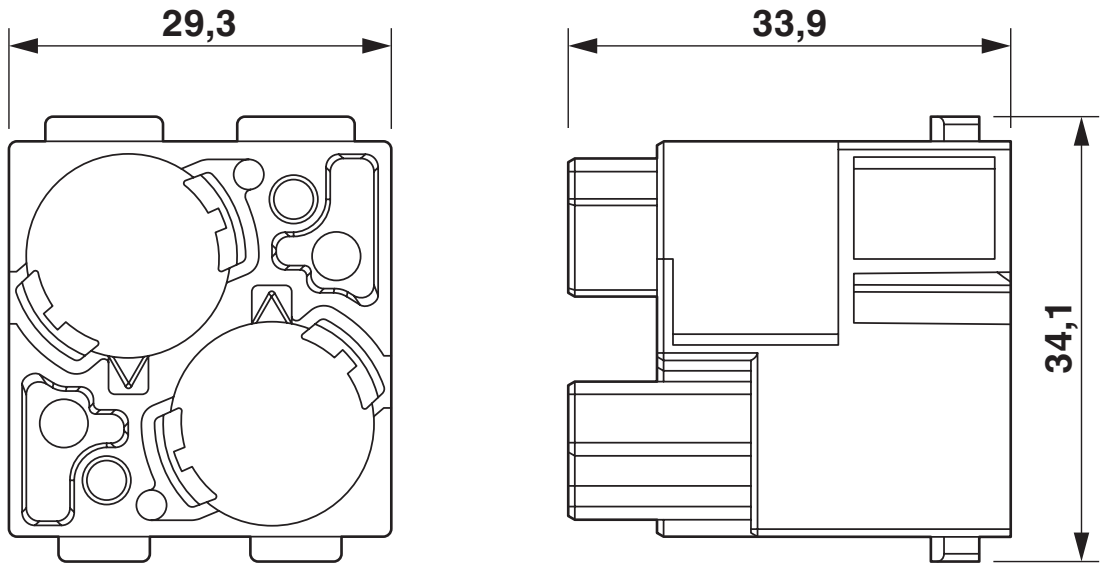

Female insert

Approvals

To download certificates, visit the product detail page: https://www.phoenixcontact.com/us/products/1417376

CSA
Approval ID: 158887

UL Recognized
Approval ID: E118976

Classifications

ECLASS

ECLASS-13.0	27440218
ECLASS-15.0	27440207

ETIM

ETIM 10.0	EC002943

UNSPSC

UNSPSC 21.0	39121400

Environmental product compliance

EU RoHS

Fulfills EU RoHS substance requirements	Yes, No exemptions

China RoHS

Environment friendly use period (EFUP)	EFUP-E
	No hazardous substances above the limits

EU REACH SVHC

REACH candidate substance (CAS No.)	No substance above 0.1 wt%

EF3.1 Climate Change

CO2e kg	0.064 kg CO2e

Phoenix Contact 2026 © - all rights reserved
https://www.phoenixcontact.com

Phoenix Contact USA
586 Fulling Mill Road
Middletown, PA 17057, United States
(+717) 944-1300
info@phoenixcon.com