HC-M-04-KT-M - Contact insert module

1417371

https://www.phoenixcontact.com/us/products/1417371

Please be informed that the data shown in this PDF document is generated from our online catalog. Please find the complete data in the user documentation. Our general terms of use for downloads are valid.



Contact insert module, number of positions: 4xKOAX, power contacts: 0, control contacts: 4, Pin, Soldering and crimp connection, 48 V, 2 A, 0.2 mm^2 ... 0.8 mm^2, application: Signal

Commercial data

Item number	1417371
Packing unit	5 pc
Minimum order quantity	1 pc
Sales key	BF62
Product key	AF7ACE
GTIN	4055626112534
Weight per piece (including packing)	6.45 g
Weight per piece (excluding packing)	6.42 g
Customs tariff number	85389099
Country of origin	PL

Technical data

Notes

General	For HEAVYCON housings type B6 to B48, HC-M-B…MF-... module carrier frame required, crimp contacts HC-M-04-KOAX... (crimp contacts not included in the scope of delivery)
General	Connectors may be operated only when there is no load/voltage.
General	It is imperative that guide pins (HC-CST) and sockets (HC-CBU) are used to prevent tip collision due to misalignment.
General	The designations “female” and “male” are used differently for coaxial contacts than for single-position contacts. The correct accessories can be found in the e-shop.

Product properties

Product type	Coaxial insert, modular
Series	HC-M-04-KOAX
Application	Signal
Number of positions	4
Connection profile	4xKOAX
Contact numbering	1 - 4
No. of cable outlets	4
Number of module slots	1
No. of power contacts	0
No. of control contacts	4
Contact material type	turned

Insulation characteristics

Overvoltage category	III
Degree of pollution	3

Electrical properties

Rated voltage (III/3)	48 V
Rated surge voltage	0.8 kV
Rated current	1.5 A
Contact resistance, phase conductor	≤ 3 mΩ
Contact resistance, inner conductor	≤ 10 mΩ
Insulation resistance	≥ 10 GΩ
Transmission characteristics (category)	shielded data cable

Connection data

Connection technology

Connection technology	Soldering and crimp connection

Conductor connection

Conductor cross-section	0.2 mm² ... 0.8 mm²

Connection cross section AWG	24 ... 18
Stripping length of the individual wire	2.5 mm ±0.5 mm

Dimensions

Dimensional drawing	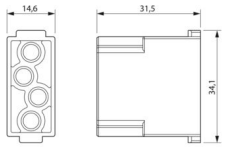
Width	34.2 mm
Height	31.5 mm
Length	14.6 mm

Mechanical characteristics

Contact diameter	4.8 mm

Material specifications

Flammability rating according to UL 94	V0
Contact material	Copper alloy
Contact surface material	Au
Contact carrier material	PC

Mechanical properties

Mechanical data

Insertion/withdrawal cycles	≥ 500

Environmental and real-life conditions

Ambient conditions

Ambient temperature (operation)	-40 °C ... 125 °C

Standards and regulations

Standards/regulations	PC: Fire protection in rail vehicles - requirement sets R22, R23, and R24 acc. to DIN EN 45545-2 (Risk level HL1 - HL3)

Mounting

Assembly note	To ensure correct use, installation in housing with IP54 protection or better is required
	For HC-M-04-BU-KOAX... contacts

Drawings

Dimensional drawing

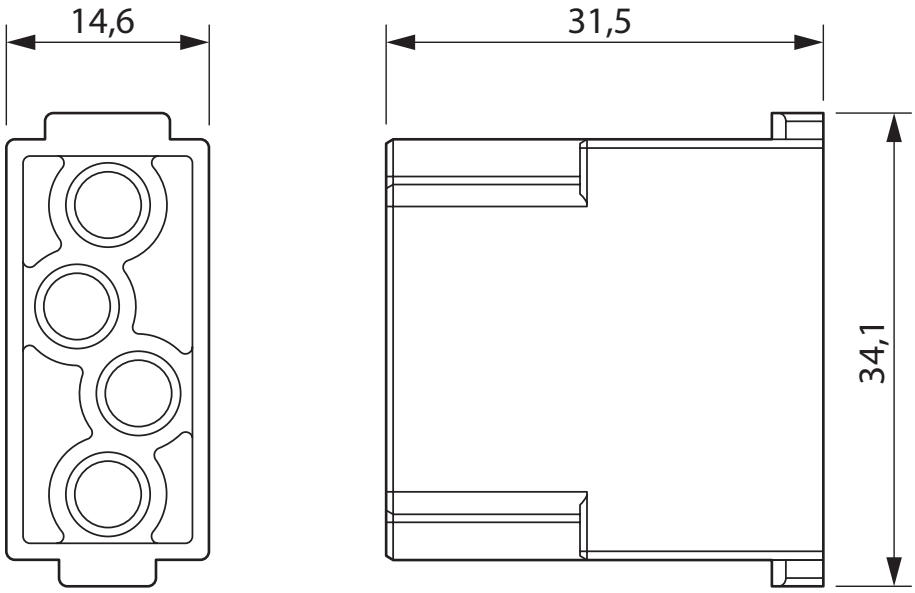

Male insert

Approvals

To download certificates, visit the product detail page: https://www.phoenixcontact.com/us/products/1417371

DNV
Approval ID: TAE000037S

CSA
Approval ID: 158887

UL Recognized
Approval ID: E118976

Classifications

ECLASS

ECLASS-13.0	27440217
ECLASS-15.0	27440217

ETIM

ETIM 10.0	EC000438

UNSPSC

UNSPSC 21.0	39121400

Environmental product compliance

EU RoHS

Fulfills EU RoHS substance requirements	Yes, No exemptions

China RoHS

Environment friendly use period (EFUP)	EFUP-E
	No hazardous substances above the limits

EU REACH SVHC

REACH candidate substance (CAS No.)	No substance above 0.1 wt%

EF3.1 Climate Change

CO2e kg	0.051 kg CO2e

Phoenix Contact 2026 © - all rights reserved
https://www.phoenixcontact.com

Phoenix Contact USA
586 Fulling Mill Road
Middletown, PA 17057, United States
(+717) 944-1300
info@phoenixcon.com