MD-INB24-4-SZP-S - Module plate

1415243

https://www.phoenixcontact.com/us/products/1415243

Please be informed that the data shown in this PDF document is generated from our online catalog. Please find the complete data in the user documentation. Our general terms of use for downloads are valid.

Module plate, with seal, for CES B24 sealing frames, with 4 openings, including mounting screws



Product description

Module plate
8 mounting screws (M5x12) /
and
Washers are supplied as standard

Commercial data

Item number	1415243
Packing unit	1 pc
Minimum order quantity	1 pc
Sales key	BF67
Product key	AF7CZX
GTIN	4055626039480
Weight per piece (including packing)	718.5 g
Weight per piece (excluding packing)	22.22 g
Customs tariff number	73089059
Country of origin	DE

Technical data

Notes

General	incl. mounting screws

Product properties

Product type	Adapter plate
Seal present	yes

Connection data

Tightening torque	1 ... 1.2 Nm

Dimensions

Dimensional drawing	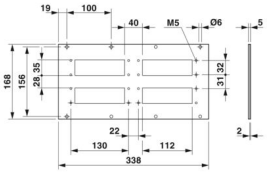
Width	168 mm
Height	2 mm
Length	338 mm

Material specifications

Material	Stainless steel 1.4301/AISI 304
Seal material	NBR

Environmental and real-life conditions

Ambient conditions

Degree of protection	IP54
Ambient temperature (operation)	-40 °C ... 100 °C

Mounting

Assembly note	Diameter of fixing hole for self-tapping screw: 4.5 mm ... 4.7 mm, mounting screws (M5x12): 1.0 Nm ... 1.2 Nm tightening torque, SW4 Allen key
	Make sure the seal is fitted correctly (must not be be squeezed out at the sides)

Drawings

Dimensional drawing

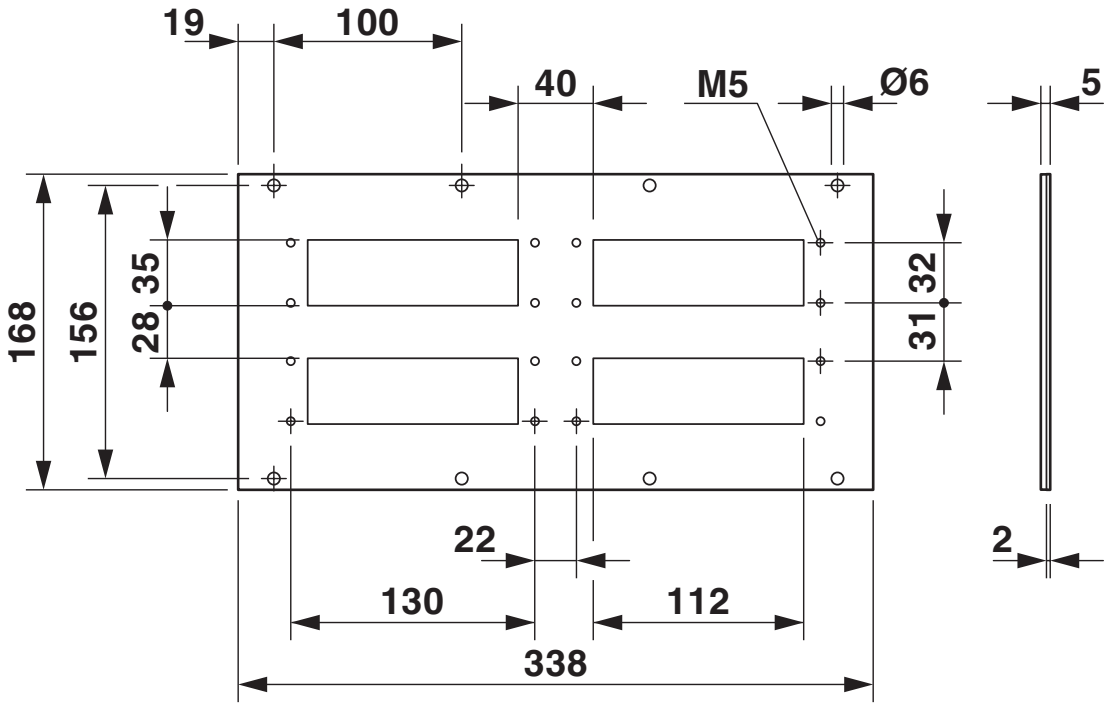

Dimensional drawing

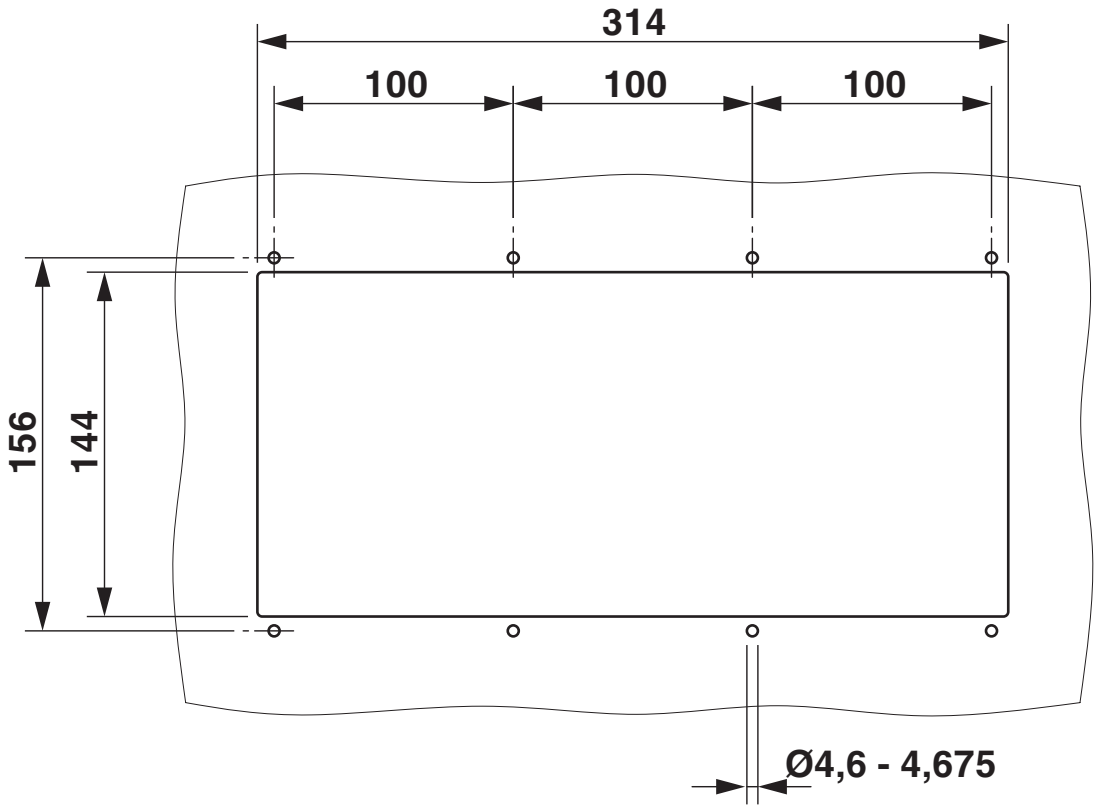

Wall cutout drawing

Classifications

ECLASS

ECLASS-13.0	27440201
ECLASS-15.0	27440201

ETIM

ETIM 10.0	EC002309

UNSPSC

UNSPSC 21.0	31261500

Environmental product compliance

China RoHS

Environment friendly use period (EFUP)	EFUP-E
	No hazardous substances above the limits

EU REACH SVHC

REACH candidate substance (CAS No.)	No substance above 0.1 wt%

EF3.1 Climate Change

CO2e kg	11.534 kg CO2e

Phoenix Contact 2026 © - all rights reserved
https://www.phoenixcontact.com

Phoenix Contact USA
586 Fulling Mill Road
Middletown, PA 17057, United States
(+717) 944-1300
info@phoenixcon.com