SAC-5P-M12MRL/10,0-500 FE - Power cable

1414864

https://www.phoenixcontact.com/us/products/1414864

Please be informed that the data shown in this PDF document is generated from our online catalog. Please find the complete data in the user documentation. Our general terms of use for downloads are valid.



Power cable, 5-position, PVC, gray RAL 7001, Plug angled M12, coding: L, on free cable end, cable length: 10 m, for direct current up to 16 A/63 V

Your advantages

- Easy and safe: 100 % electrically tested plug-in components
- Protection against mismatching, thanks to special L-coding

Commercial data

Item number	1414864
Packing unit	1 pc
Minimum order quantity	1 pc
Sales key	BF05
Product key	AF1CDP
GTIN	4055626034966
Weight per piece (including packing)	2,084.42 g
Weight per piece (excluding packing)	2,084.42 g
Customs tariff number	85444290
Country of origin	PL

Technical data

Product properties

Product type	Power cable
Application	Energy supply
Number of positions	5
No. of cable outlets	1
Shielded	no
Coding	L

Insulation characteristics

Overvoltage category	III
Degree of pollution	3

Material specifications

Flammability rating according to UL 94	V0
Material of grip body	PP
Contact material	CuZn
Contact surface material	Ni/Au
Contact carrier material	PA
Material for screw connection	Zinc die-cast, nickel-plated

Electrical properties

Insulation resistance	≥ 100 MΩ
Nominal voltage U_N	63 V DC
Nominal current I_N	16 A

Mechanical properties

Mechanical data

Insertion/withdrawal cycles	≥ 100

Connector

Connection 1

Type	Plug angled M12
Coding type	L (Power)

Connection 2

Type	free cable end

Cable/line

Cable length	10 m

PVC gray [500]

Dimensional drawing	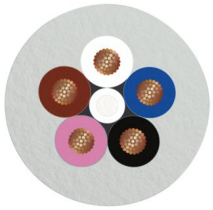
Cable weight	205 kg/km
UL AWM Style	2464 (80°C/300 V)
Number of positions	5
Shielded	no
Cable type	PVC gray [500]
Conductor structure, voltage supply	141x 0.15 mm
AWG power supply	14
Conductor cross-section	5x 2.5 mm²
Wire diameter incl. insulation	3 mm ±0.1 mm
External cable diameter	10.10 mm ±0.3 mm
Outer sheath, material	PVC
External sheath, color	gray RAL 7001
Conductor material	Bare Cu litz wires
Material wire insulation	PVC
Single wire, color	brown, white, blue, black, pink
Thickness, insulation	≥ 0.36 mm
Thickness, outer sheath	approx. 0.76 mm
Max. conductor resistance	≤ 8 Ω/km (at 20 °C)
Insulation resistance	≥ 100 MΩ*km (at 20 °C)
Nominal voltage, cable	≤ 300 V AC
Test voltage	≥ 3000 V AC (Spark test)
Minimum bending radius, fixed installation	5 x D
Minimum bending radius, flexible installation	10 x D
Smallest bending radius, fixed installation	51 mm
Smallest bending radius, movable installation	101 mm
Dynamic load capacity (bending)	Max. bending cycles: 2000000, Bending radius: 10 x D, Traversing path: 10 m, Traversing rate: 3 m/s, Acceleration: 10 m/s²
Flame resistance	According to UL 758/1581 (Cable Flame)
	according to UL 758/1581 FT1
	According to DIN EN 60332-1-2
Resistance to oil	according to DIN EN 60811-404, 168 h at 60 °C
Ambient temperature (operation)	-40 °C ... 80 °C (cable, fixed installation)
	-20 °C ... 80 °C (Cable, flexible installation)

Environmental and real-life conditions

Ambient conditions

Degree of protection	IP65
	IP67
Ambient temperature (operation) (male connector/female connector)	-25 °C ... 85 °C (Plug / socket)

Standards and regulations

Standard designation	M12 connector
Standards/specifications	IEC 61076-2-111

Drawings

Dimensional drawing

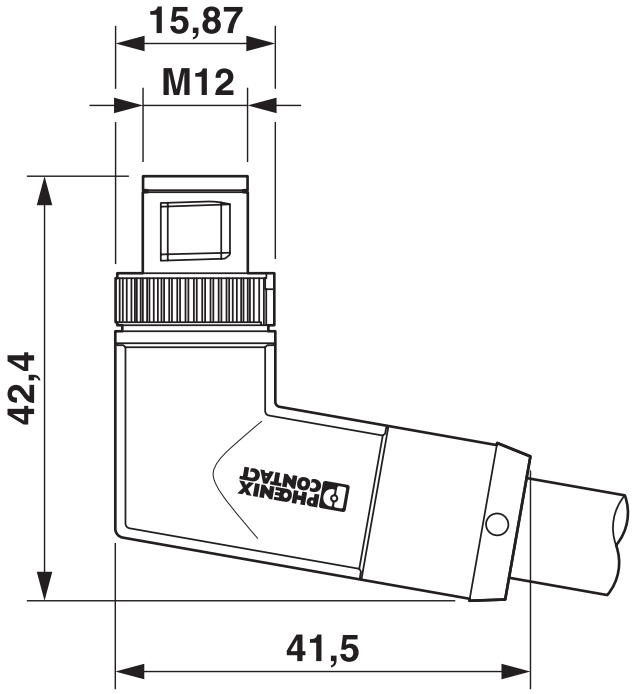

M12 x 1 male plug, angled

Schematic diagram

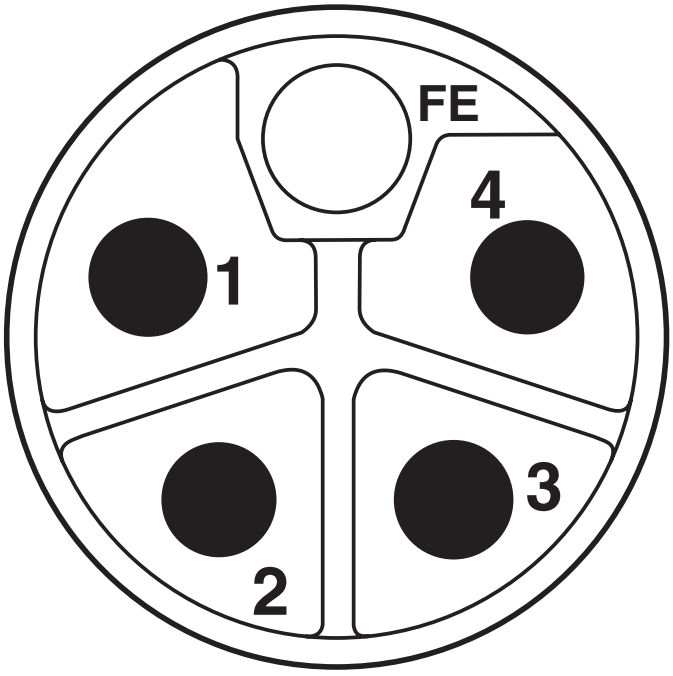

Pin assignment of M12 connector, 5-pos., L-coded, pin side view

Diagram

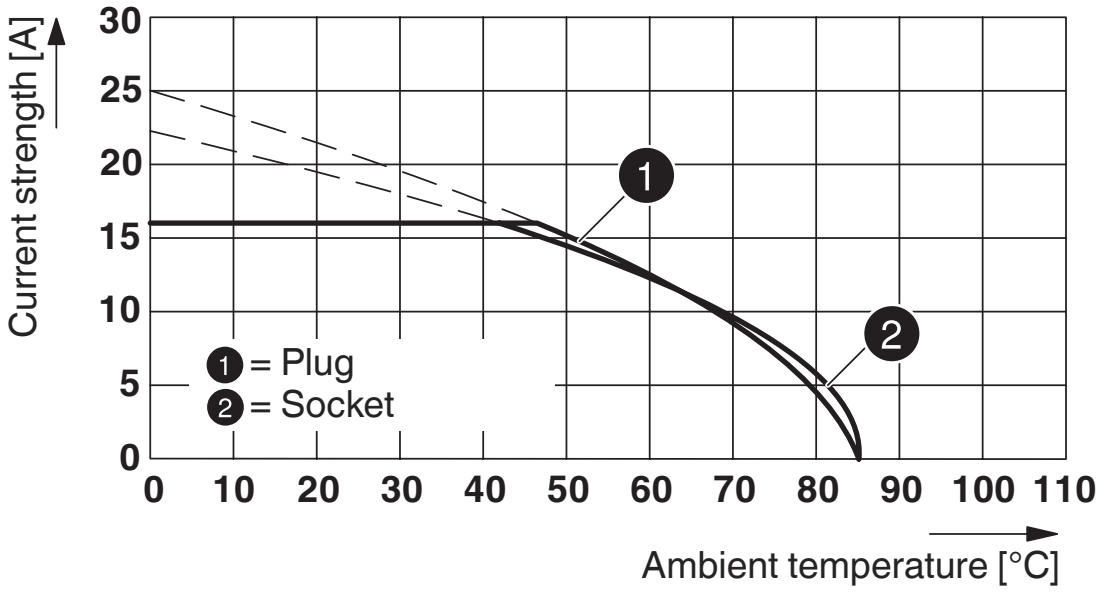

Circuit diagram

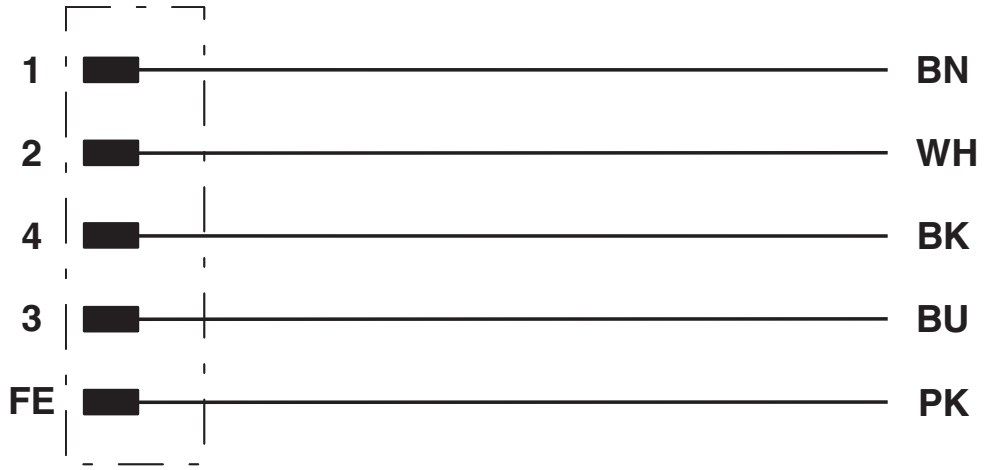

Contact assignment of the M12 plug

Classifications

ECLASS

ECLASS-13.0	27060327
ECLASS-15.0	27060327

ETIM

ETIM 10.0	EC001855

UNSPSC

UNSPSC 21.0	26121600

Environmental product compliance

EU RoHS

Fulfills EU RoHS substance requirements	Yes, No exemptions

China RoHS

Environment friendly use period (EFUP)	EFUP-E
	No hazardous substances above the limits

EU REACH SVHC

REACH candidate substance (CAS No.)	No substance above 0.1 wt%

Phoenix Contact 2026 © - all rights reserved
https://www.phoenixcontact.com

Phoenix Contact USA
586 Fulling Mill Road
Middletown, PA 17057, United States
(+717) 944-1300
info@phoenixcon.com