# SAC-5P-M12MRK/10,0-PUR PE SH - Power cable

1414847

https://www.phoenixcontact.com/us/products/1414847

Please be informed that the data shown in this PDF document is generated from our online catalog. Please find the complete data in the user documentation. Our general terms of use for downloads are valid.



Power cable, 5-position, PUR halogen-free, orange RAL 2003, shielded (Advanced Shielding Technology), Plug angled M12, coding: K, on free cable end, cable length: 10 m, for AC current up to 16 A/690 V

## Your advantages

- Easy and safe: 100 % electrically tested plug-in components
- Protection against mismatching, thanks to special K-coding
- Shield power reliably – 360° shielding to reduce electromagnetic loads
- Our standard: robust halogen-free PUR cable

## Commercial data

| | |
|---|---|
| Item number | 1414847 |
| Packing unit | 1 pc |
| Minimum order quantity | 1 pc |
| Sales key | BF05 |
| Product key | AF1CDQ |
| GTIN | 4055626034799 |
| Weight per piece (including packing) | 1,989.06 g |
| Weight per piece (excluding packing) | 1,989.06 g |
| Customs tariff number | 85444290 |
| Country of origin | DE |

# Technical data

## Product properties

| | |
|---|---|
| Product type | Power cable |
| Application | Energy supply |
| Number of positions | 5 |
| No. of cable outlets | 1 |
| Shielded | yes |
| Coding | K |

Insulation characteristics

| | |
|---|---|
| Overvoltage category | III |
| Degree of pollution | 3 |

## Material specifications

| | |
|---|---|
| Flammability rating according to UL 94 | V0 |
| Material of grip body | PP |
| Contact material | CuZn |
| Contact surface material | Ni/Au |
| Contact carrier material | PA |
| Material for screw connection | Zinc die-cast, nickel-plated |

## Electrical properties

| | |
|---|---|
| Insulation resistance | ≥ 100 MΩ |
| Nominal voltage $U_N$ | 690 V AC |
| Nominal current $I_N$ | 16 A |

## Mechanical properties

Mechanical data

| | |
|---|---|
| Insertion/withdrawal cycles | ≥ 100 |

## Connector

Connection 1

| | |
|---|---|
| Type | Plug angled M12 |
| Coding type | K (Power) |

Connection 2

| | |
|---|---|
| Type | free cable end |

## Cable/line

| | |
|---|---|
| Cable length | 10 m |

PUR halogen-free orange [PUR]

| | |
|---|---|
| Dimensional drawing | 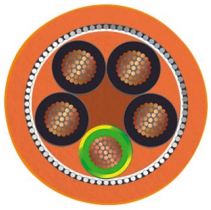 |
| Cable weight | 195 kg/km |
| UL AWM Style | 90 °C / 1000 V |
| Number of positions | 5 |
| Shielded | yes |
| Cable type | PUR halogen-free orange [PUR] |
| Conductor structure, voltage supply | 80x 0.20 mm |
| AWG power supply | 16 |
| Conductor cross-section | 5x 2.5 mm² |
| Wire diameter incl. insulation | 2.8 mm ±0.1 mm |
| External cable diameter | 9.90 mm ±0.3 Nm |
| Outer sheath, material | PUR |
| External sheath, color | orange RAL 2003 |
| Conductor material | Bare Cu litz wires |
| Material wire insulation | PP |
| Single wire, color | black 1, black 2, black 3, black 4, green/yellow |
| Thickness, insulation | ≥ 0.26 mm |
| Thickness, outer sheath | approx. 0.75 mm |
| Overall twist | 5 cores, twisted |
| Max. conductor resistance | ≤ 8 Ω/km (at 20 °C) |
| Insulation resistance | ≥ 1 GΩ*km (at 20 °C) |
| Nominal voltage, cable | ≤ 1000 V AC |
| Test voltage | ≥ 10000 V AC (Spark test) |
| Minimum bending radius, fixed installation | 5 x D |
| Minimum bending radius, flexible installation | 10 x D |
| Smallest bending radius, fixed installation | 49 mm |
| Smallest bending radius, movable installation | 99 mm |
| Dynamic load capacity (bending) | Max. bending cycles: 5000000, Bending radius: 10 x D, Traversing path: 10 m, Traversing rate: 3 m/s, Acceleration: 10 m/s² |
| Dynamic load capacity (torsion) | Torsion: ±180 °/m, Torsion cycles: 500000, Torsional frequency: 35 cycles/min. |
| Halogen-free | in accordance with DIN VDE 0472 part 815 |
| | in accordance with DIN EN 50267-2-1 |
| Flame resistance | According to UL 758/1581 (Cable Flame) |
| | in accordance with UL 758/1581 FT2 |
| | according to DIN EN 60332-2-2 |

| | |
|---|---|
| Resistance to oil | according to DIN EN 60811-404, 168 h at 100 °C |
| | according to UL 758, 168 h at 60 °C |
| Other resistance | Hydrolysis and microbe resistant as per VDE 0282 section 10 |
| | Low adhesion |
| | abrasion-resistant |
| | Resistant to salt water |
| Ambient temperature (operation) | -50 °C ... 90 °C (cable, fixed installation) |
| | -30 °C ... 90 °C (Cable, flexible installation) |

## Environmental and real-life conditions

### Ambient conditions

| | |
|---|---|
| Degree of protection | IP65 |
| | IP67 (without preloading, as additional test in accordance with IEC 60529) |
| Ambient temperature (operation) (male connector/female connector) | -25 °C ... 85 °C (Plug / socket) |

## Standards and regulations

| | |
|---|---|
| Standard designation | M12 connector |
| Standards/specifications | IEC 61076-2-111 |

## Drawings

Dimensional drawing

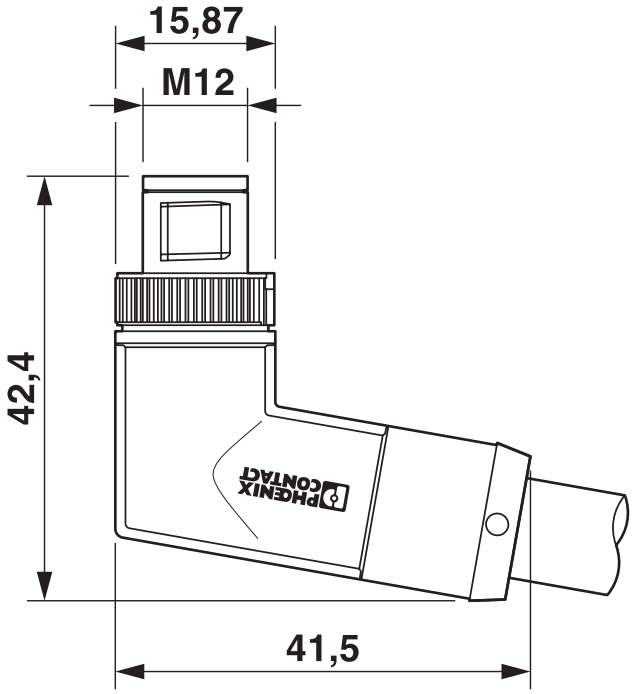


M12 x 1 male plug, angled

Schematic diagram

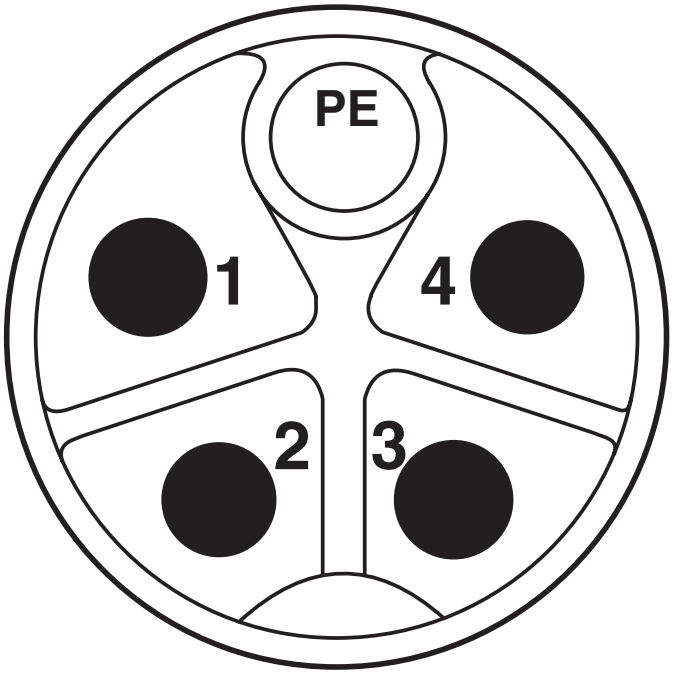


Connector pin assignment of M12 plug, 5-pos., K-coded, pin side view

Diagram

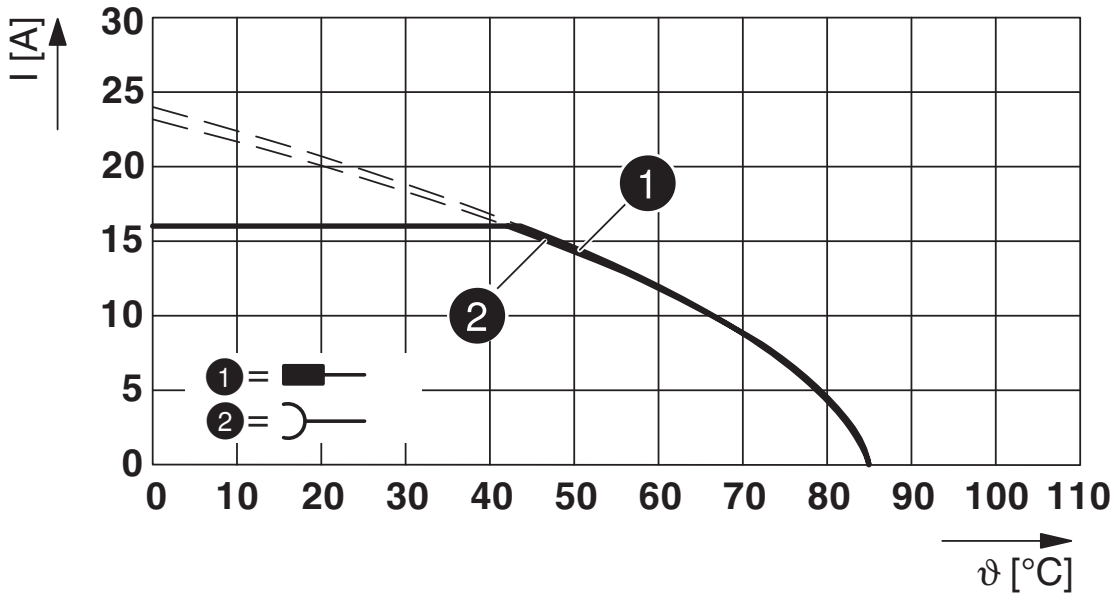


Base curve

Circuit diagram

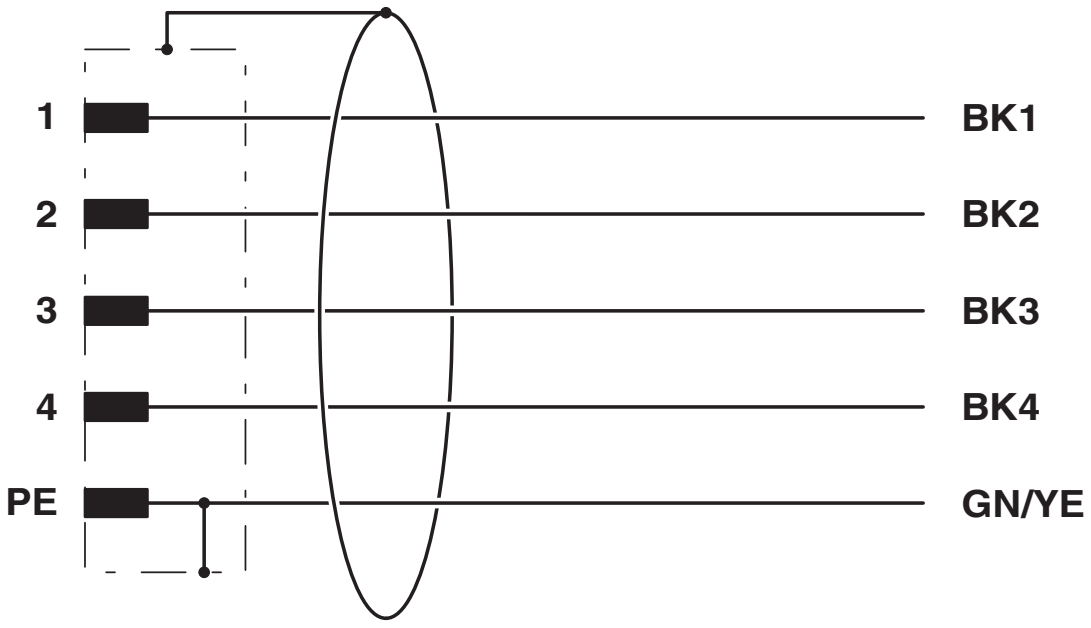


Contact assignment of the M12 plug

## Classifications

### ECLASS

| | |
|---|---|
| ECLASS-13.0 | 27060327 |
| ECLASS-15.0 | 27060327 |

### ETIM

| | |
|---|---|
| ETIM 10.0 | EC001855 |

### UNSPSC

| | |
|---|---|
| UNSPSC 21.0 | 26121600 |

## Environmental product compliance

EU RoHS

| | |
|---|---|
| Fulfills EU RoHS substance requirements | Yes, No exemptions |

China RoHS

| | |
|---|---|
| Environment friendly use period (EFUP) | EFUP-E |
| | No hazardous substances above the limits |

EU REACH SVHC

| | |
|---|---|
| REACH candidate substance (CAS No.) | No substance above 0.1 wt% |

Phoenix Contact 2026 © - all rights reserved
https://www.phoenixcontact.com

Phoenix Contact USA
586 Fulling Mill Road
Middletown, PA 17057, United States
(+717) 944-1300
info@phoenixcon.com