SAC-5P- 5,0-PUR/M12FRK PE SH - Power cable

1414801

https://www.phoenixcontact.com/us/products/1414801

Please be informed that the data shown in this PDF document is generated from our online catalog. Please find the complete data in the user documentation. Our general terms of use for downloads are valid.



Power cable, 5-position, PUR halogen-free, orange RAL 2003, shielded (Advanced Shielding Technology), free cable end, on Socket angled M12, coding: K, cable length: 5 m, for AC current up to 16 A/690 V

Your advantages

- Easy and safe: 100 % electrically tested plug-in components
- Protection against mismatching, thanks to special K-coding
- Shield power reliably – 360° shielding to reduce electromagnetic loads
- Our standard: robust halogen-free PUR cable

Commercial data

Item number	1414801
Packing unit	1 pc
Minimum order quantity	1 pc
Sales key	BF05
Product key	AF1CDQ
GTIN	4055626034355
Weight per piece (including packing)	1,026.76 g
Weight per piece (excluding packing)	1,026.76 g
Customs tariff number	85444290
Country of origin	PL

Technical data

Product properties

Product type	Power cable
Application	Energy supply
Number of positions	5
No. of cable outlets	1
Shielded	yes
Coding	K

Insulation characteristics

Overvoltage category	III
Degree of pollution	3

Material specifications

Flammability rating according to UL 94	V0
Material of grip body	PP
Contact material	CuZn
Contact surface material	Ni/Au
Contact carrier material	PA
Material for screw connection	Zinc die-cast, nickel-plated

Electrical properties

Insulation resistance	≥ 100 MΩ
Nominal voltage U_N	690 V AC
Nominal current I_N	16 A

Mechanical properties

Mechanical data

Insertion/withdrawal cycles	≥ 100

Connector

Connection 1

Type	free cable end

Connection 2

Type	Socket angled M12
Coding type	K (Power)

Cable/line

Cable length	5 m

PUR halogen-free orange [PUR]

Dimensional drawing	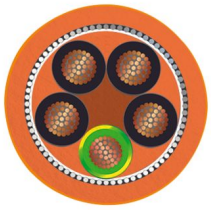
Cable weight	195 kg/km
UL AWM Style	90 °C / 1000 V
Number of positions	5
Shielded	yes
Cable type	PUR halogen-free orange [PUR]
Conductor structure, voltage supply	80x 0.20 mm
AWG power supply	16
Conductor cross-section	5x 2.5 mm²
Wire diameter incl. insulation	2.8 mm ±0.1 mm
External cable diameter	9.90 mm ±0.3 Nm
Outer sheath, material	PUR
External sheath, color	orange RAL 2003
Conductor material	Bare Cu litz wires
Material wire insulation	PP
Single wire, color	black 1, black 2, black 3, black 4, green/yellow
Thickness, insulation	≥ 0.26 mm
Thickness, outer sheath	approx. 0.75 mm
Overall twist	5 cores, twisted
Max. conductor resistance	≤ 8 Ω/km (at 20 °C)
Insulation resistance	≥ 1 GΩ*km (at 20 °C)
Nominal voltage, cable	≤ 1000 V AC
Test voltage	≥ 10000 V AC (Spark test)
Minimum bending radius, fixed installation	5 x D
Minimum bending radius, flexible installation	10 x D
Smallest bending radius, fixed installation	49 mm
Smallest bending radius, movable installation	99 mm
Dynamic load capacity (bending)	Max. bending cycles: 5000000, Bending radius: 10 x D, Traversing path: 10 m, Traversing rate: 3 m/s, Acceleration: 10 m/s²
Dynamic load capacity (torsion)	Torsion: ±180 °/m, Torsion cycles: 500000, Torsional frequency: 35 cycles/min.
Halogen-free	in accordance with DIN VDE 0472 part 815
	in accordance with DIN EN 50267-2-1
Flame resistance	According to UL 758/1581 (Cable Flame)
	in accordance with UL 758/1581 FT2
	according to DIN EN 60332-2-2

Resistance to oil	according to DIN EN 60811-404, 168 h at 100 °C
	according to UL 758, 168 h at 60 °C
Other resistance	Hydrolysis and microbe resistant as per VDE 0282 section 10
	Low adhesion
	abrasion-resistant
	Resistant to salt water
Ambient temperature (operation)	-50 °C ... 90 °C (cable, fixed installation)
	-30 °C ... 90 °C (Cable, flexible installation)

Environmental and real-life conditions

Ambient conditions

Degree of protection	IP65
	IP67 (without preloading, as additional test in accordance with IEC 60529)
Ambient temperature (operation) (male connector/female connector)	-25 °C ... 85 °C (Plug / socket)

Standards and regulations

Standard designation	M12 connector
Standards/specifications	IEC 61076-2-111

Drawings

Dimensional drawing

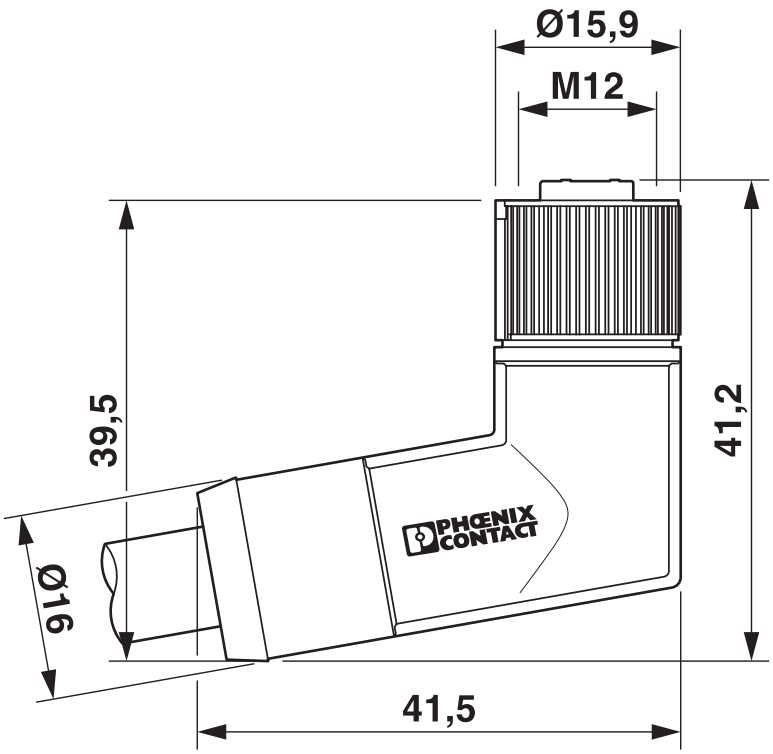

M12 x 1 socket, angled

Schematic diagram

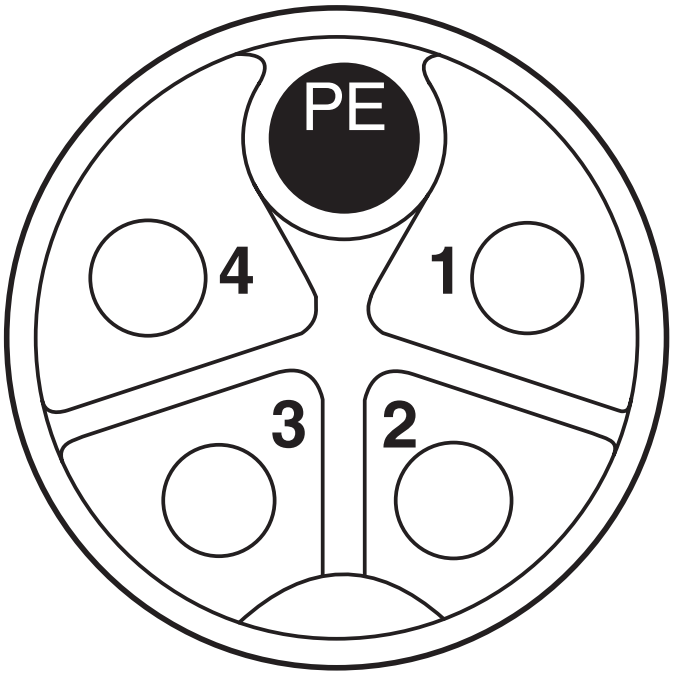

Pin assignment of M12 socket, 5-pos., K-coded, socket side view

Diagram

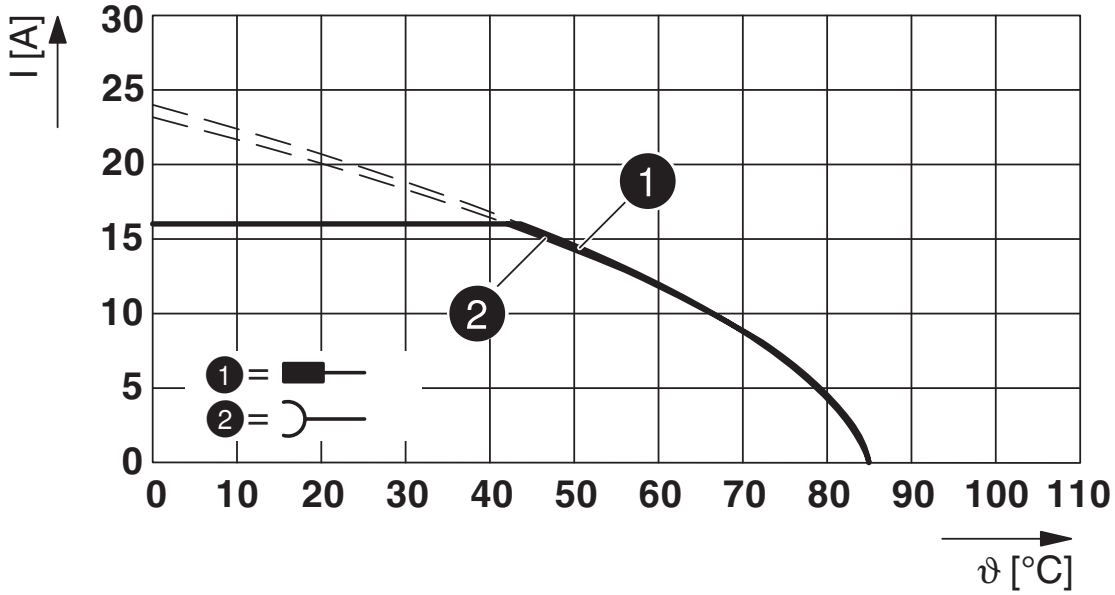

Base curve

Circuit diagram

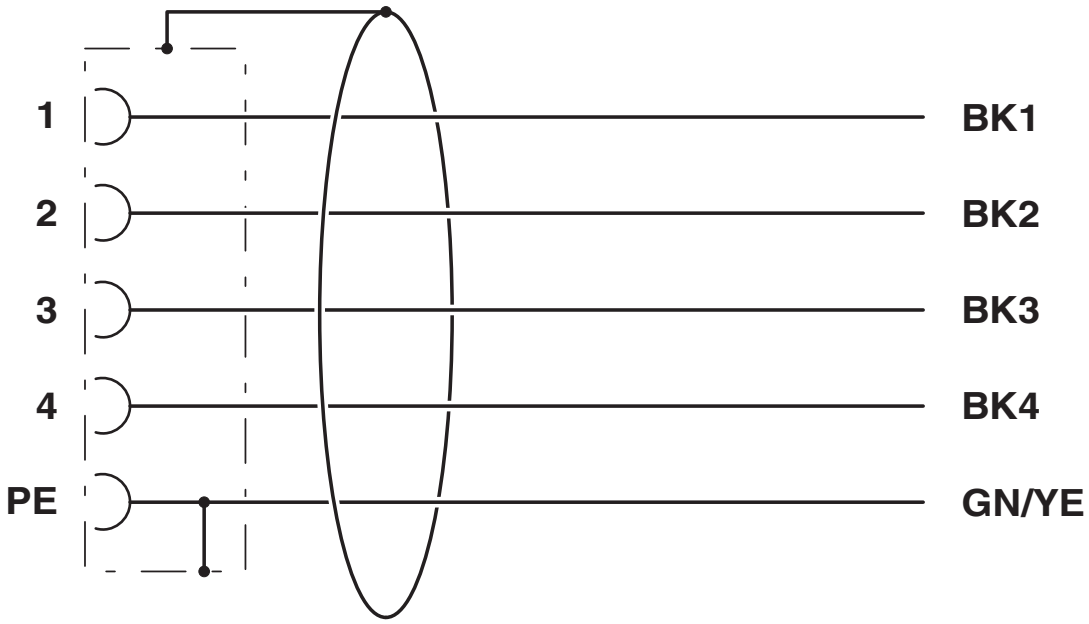

Contact assignment of the M12 socket

Approvals

To download certificates, visit the product detail page: https://www.phoenixcontact.com/us/products/1414801

UL Listed
Approval ID: E468743

	Nominal voltage U_N	Nominal current I_N	Cross section AWG	Cross section mm^2
keine				
	600 V	16 A	- 14	- 14

cUL Listed
Approval ID: E468743

	Nominal voltage U_N	Nominal current I_N	Cross section AWG	Cross section mm^2
keine				
	600 V	16 A	- 14	-

EAC-RoHS
Approval ID: RU D-DE.HB35.B.00387

Classifications

ECLASS

ECLASS-13.0	27060327
ECLASS-15.0	27060327

ETIM

ETIM 10.0	EC001855

UNSPSC

UNSPSC 21.0	26121600

Environmental product compliance

EU RoHS

Fulfills EU RoHS substance requirements	Yes, No exemptions

China RoHS

Environment friendly use period (EFUP)	EFUP-E
	No hazardous substances above the limits

EU REACH SVHC

REACH candidate substance (CAS No.)	No substance above 0.1 wt%

EF3.1 Climate Change

CO2e kg	7.123 kg CO2e

Phoenix Contact 2026 © - all rights reserved
https://www.phoenixcontact.com

Phoenix Contact USA
586 Fulling Mill Road
Middletown, PA 17057, United States
(+717) 944-1300
info@phoenixcon.com