CUC-V06-C1PGY-S/R4CEA:1 - RJ45 connector

1414406

https://www.phoenixcontact.com/us/products/1414406

Please be informed that the data shown in this PDF document is generated from our online catalog. Please find the complete data in the user documentation. Our general terms of use for downloads are valid.

CRIMP



RJ45 connector, RJ45, Ethernet/PROFINET, CAT6$_A$ (10 Gbps), 2-position, connection method: Crimp connection, material: Plastic, connection cross section: AWG 24- 27, degree of protection: IP67

Commercial data

Item number	1414406
Packing unit	1 pc
Minimum order quantity	1 pc
Sales key	AB17
Product key	ABNNAB
GTIN	4055626028279
Weight per piece (including packing)	18.35 g
Weight per piece (excluding packing)	15.974 g
Customs tariff number	85366990
Country of origin	DE

Technical data

Product properties

Product type	Data connector (cable side)
Type	RJ45
Number of positions	2
Connection profile	RJ45
No. of cable outlets	1
Shielded	yes
Cable outlet	straight

Insulation characteristics

Overvoltage category	I
Degree of pollution	2

Electrical properties

Rated voltage (III/3)	72 V (DC)
Rated current	1 A
Frequency range	to 500 MHz
Nominal voltage U_N	72 V (DC)
Nominal current I_N	1.75 A
Transmission medium	Copper
Transmission speed	10 Gbps (500 MHz)
Transmission characteristics (category)	$CAT6_A$

Connection data

Connection technology

Connection method	Crimp connection
Connection cross section AWG	24 ... 27 (flexible)
Conductor cross-section	0.1 mm² ... 0.2 mm² (flexible)

Interfaces

Signal type/category	Ethernet/PROFINET $CAT6_A$, 10 Gbps (500 MHz)

Dimensions

Width	38.4 mm
Height	19.9 mm
Length	53 mm

Material specifications

Flammability rating according to UL 94	V0
Housing material	Plastic
Cable seal material	NBR
Contact material	Phosphor bronze

Contact surface material	Gold
Contact carrier material	PC
O-ring material	FPM

Cable/line

External cable diameter	5 mm ... 8.5 mm
Cable cross section	0.1 mm²

Mechanical properties

Mechanical data

Insertion/withdrawal cycles	≥ 1000

Environmental and real-life conditions

Ambient conditions

Degree of protection	IP67
Ambient temperature (operation)	-25 °C ... 60 °C

Drawings

Dimensional drawing

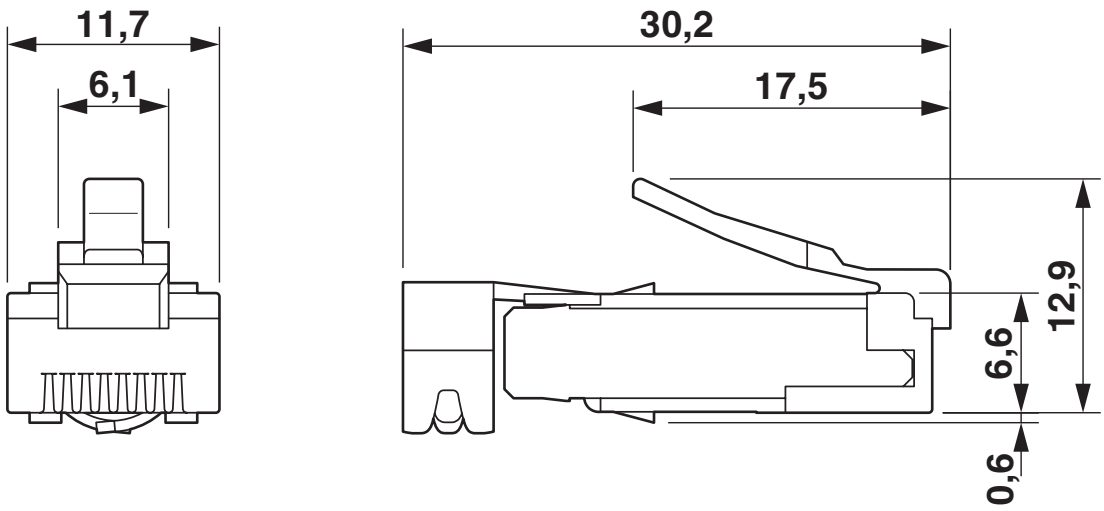

RJ45 male insert

Classifications

ECLASS

ECLASS-13.0	27440390
ECLASS-15.0	27440114

ETIM

ETIM 10.0	EC001121

UNSPSC

UNSPSC 21.0	39121400

Environmental product compliance

EU RoHS

Fulfills EU RoHS substance requirements	Yes, No exemptions

China RoHS

Environment friendly use period (EFUP)	EFUP-E
	No hazardous substances above the limits

EU REACH SVHC

REACH candidate substance (CAS No.)	6,6'-di-tert-butyl-2,2'-methylenedi-p-cresol(CAS: 119-47-1)
SCIP	9f9dbbdc-71ed-4a2c-b3d7-3d4002efb2bc

Phoenix Contact 2026 © - all rights reserved
https://www.phoenixcontact.com

Phoenix Contact USA
586 Fulling Mill Road
Middletown, PA 17057, United States
(+717) 944-1300
info@phoenixcon.com