HC-B-TA-PG21-PLR-BK - Adapter

1414249

https://www.phoenixcontact.com/us/products/1414249

Please be informed that the data shown in this PDF document is generated from our online catalog. Please find the complete data in the user documentation. Our general terms of use for downloads are valid.



Plastic thread adapter with bayonet lock, for EVO housing series B, Pg21 thread

Commercial data

Item number	1414249
Packing unit	1 pc
Minimum order quantity	1 pc
Sales key	BF57
Product key	AF7APL
GTIN	4055626022123
Weight per piece (including packing)	22.5 g
Weight per piece (excluding packing)	21.8 g
Customs tariff number	85389099
Country of origin	PL

Technical data

Product properties

Product type	Thread adapter
Application	Bayonet B - Pg
Type of the screw connection	Pg21

Connection data

Tightening torque	... 8 Nm

Dimensions

Dimensional drawing	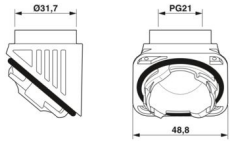
Thread type on seal side	Pg21

Internal dimensions

Length of internal thread	11 mm

Material specifications

Flammability rating according to UL 94	V0
Seal material	NBR (O-ring)
Housing material	PA

Mechanical properties

Mechanical data

Type of the screw connection	Pg21

Environmental and real-life conditions

Ambient conditions

Degree of protection	IP66
Ambient temperature (operation)	-40 °C ... 100 °C

Mounting

Assembly note	Bayonet locking max. 3x can be removed
	The plastic thread adapter does not establish an electrical connection between the cable gland and connector housing. For this reason, only plastic cable protection systems or plastic cable glands may be used.

Drawings

Dimensional drawing

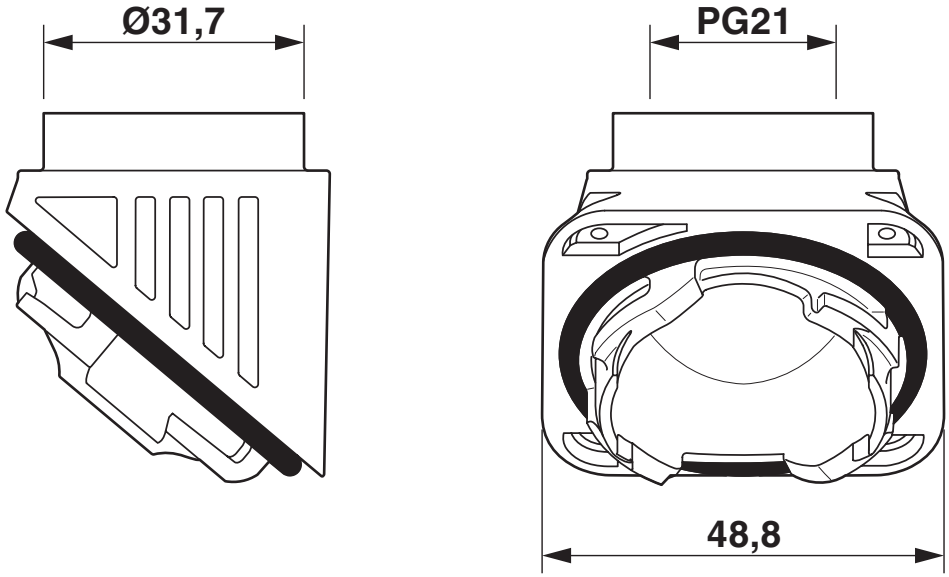

Dimensional drawing

Approvals

To download certificates, visit the product detail page: https://www.phoenixcontact.com/us/products/1414249

DNV
Approval ID: TAE000037S

cUL Recognized
Approval ID: E255026

UL Recognized
Approval ID: E255026

EAC
Approval ID: RU C-DE.AI30.B.01102

Classifications

ECLASS

ECLASS-13.0	27140801
ECLASS-15.0	27140801

ETIM

ETIM 10.0	EC000441

UNSPSC

UNSPSC 21.0	39121400

Environmental product compliance

EU RoHS

Fulfills EU RoHS substance requirements	Yes, No exemptions

China RoHS

Environment friendly use period (EFUP)	EFUP-E
	No hazardous substances above the limits

EU REACH SVHC

REACH candidate substance (CAS No.)	No substance above 0.1 wt%

EF3.1 Climate Change

CO2e kg	0.273 kg CO2e

Phoenix Contact 2026 © - all rights reserved
https://www.phoenixcontact.com

Phoenix Contact USA
586 Fulling Mill Road
Middletown, PA 17057, United States
(+717) 944-1300
info@phoenixcon.com