# HC-ADV-B24-HHWH-1STM32-EMC-AL - Housing

1413431

https://www.phoenixcontact.com/us/products/1413431

Please be informed that the data shown in this PDF document is generated from our online catalog. Please find the complete data in the user documentation. Our general terms of use for downloads are valid.



HEAVYCON ADVANCE sleeve housing, B24, with stainless steel screw locking (Allen screw), salt-water-resistant aluminum, height 93.7 mm, with thread, 1 x M32 lateral cable outlet, without surface; conductive seal (EMC properties)

## Commercial data

| | |
|---|---|
| Item number | 1413431 |
| Packing unit | 1 pc |
| Minimum order quantity | 1 pc |
| Sales key | BF58 |
| Product key | AF7APH |
| GTIN | 4055626030449 |
| Weight per piece (including packing) | 392.3 g |
| Weight per piece (excluding packing) | 378.6 g |
| Customs tariff number | 85389099 |
| Country of origin | PL |

## Technical data

### Notes

| | |
|---|---|
| Notes on the product family | for contact inserts HC-B24, BB46, D64, DD108, HV10/16, M |
| Note on application | compatible with module carrier frames with click-in function |

### Product properties

| | |
|---|---|
| Product type | Housing with screw locking |
| Housing type | Sleeve housing |
| Product family | HC-ADV |
| Application | Offshore/EMC |
| Type | B24 |
| No. of cable outlets | 1 |
| Type of the screw connection | 1x M32 |
| Fixing screws | M6 (screw head: 5 mm Allen screw) |
| Cable outlet | lateral |
| Pg screw connection | none |

### Connection data

| | |
|---|---|
| Tightening torque | 3 Nm ... 5 Nm (for M6 mounting screws on the sleeve housing) |

### Dimensions

| | |
|---|---|
| Dimensional drawing | 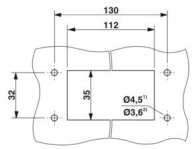 |
| Width | 57 mm |
| Height | 93.7 mm |
| Length | 152 mm |

Installation dimensions

| | |
|---|---|
| Width of the assembly cutout | 35 mm |
| Length of the assembly cutout | 112 mm |

### Material specifications

| | |
|---|---|
| Seal material | NBR, conductive |
| Housing material | Die-cast aluminum, salt water resistant |
| Housing surface material | uncoated |
| Locking latch material | Stainless steel |

### Environmental and real-life conditions

Ambient conditions

| | |
|---|---|
| | IP66 |

| | |
|---|---|
| Degree of protection | IP68 (0.2 bar/24 h) |
| | IP69 (ISO 20653:2013-02) |
| Enclosure rating (NEMA) | 4 (UL 50e) |
| | 4X (UL 50e) |
| | 12 (UL 50e) |
| Impact strength | IK09 |
| Ambient temperature (operation) | -40 °C ... 125 °C |

## Mechanical properties

Mechanical data

| | |
|---|---|
| Type of the screw connection | 1x M32 |
| Locking type | Screw |

## Mounting

| | |
|---|---|
| Assembly note | In order to guarantee that the protective conductor contact functions even when plugged in at an angle, the two panel-mount flanges must have sufficient electrical contact with the metal mounting panel. |
| Fixing screws | M6 (screw head: 5 mm Allen screw) |

## Drawings

Dimensional drawing

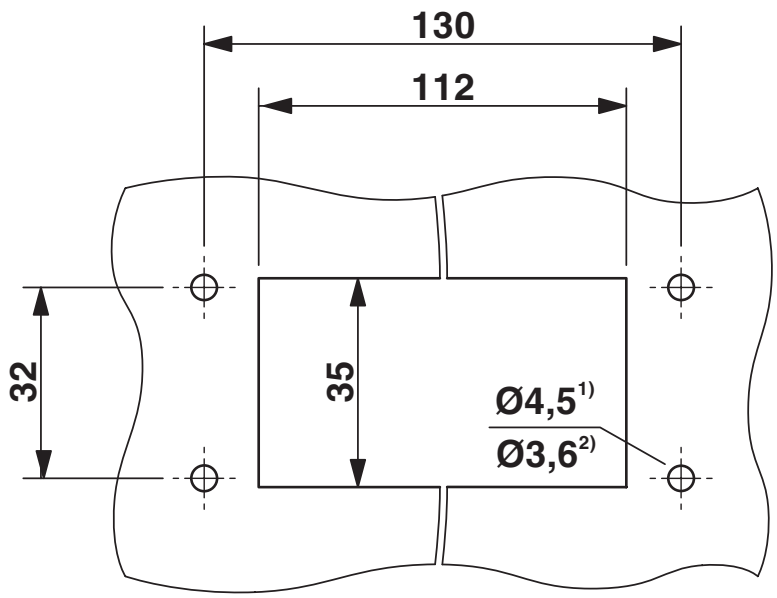


Mounting cutout
1) when M4 screws are used
2) when self-tapping Torx® screws are used (Torx® 20, M4)

Dimensional drawing

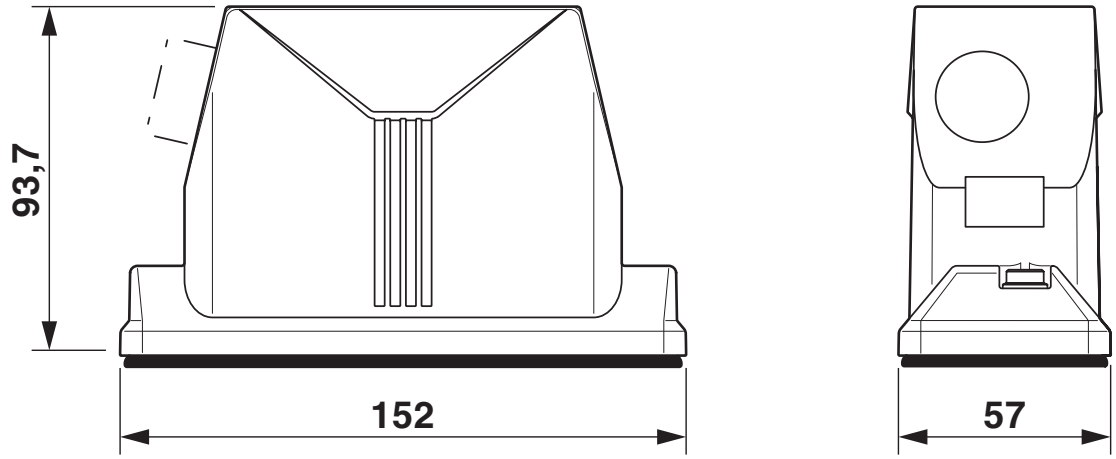


Dimensional drawing

## Approvals

To download certificates, visit the product detail page: https://www.phoenixcontact.com/us/products/1413431

**DNV**
Approval ID: TAE000037S

**cUL Recognized**
Approval ID: E255026

**UL Recognized**
Approval ID: E255026

**EAC**
Approval ID: RU C-DE.AI30.B.01102

## Classifications

### ECLASS

| | |
|---|---|
| ECLASS-13.0 | 27440202 |
| ECLASS-15.0 | 27440202 |

### ETIM

| | |
|---|---|
| ETIM 10.0 | EC000437 |

### UNSPSC

| | |
|---|---|
| UNSPSC 21.0 | 31261500 |

## Environmental product compliance

EU RoHS

| | |
|---|---|
| Fulfills EU RoHS substance requirements | Yes, No exemptions |

China RoHS

| | |
|---|---|
| Environment friendly use period (EFUP) | EFUP-E |
| | No hazardous substances above the limits |

EU REACH SVHC

| | |
|---|---|
| REACH candidate substance (CAS No.) | No substance above 0.1 wt% |

EF3.1 Climate Change

| | |
|---|---|
| CO2e kg | 5.992 kg CO2e |

Phoenix Contact 2026 © - all rights reserved
https://www.phoenixcontact.com

Phoenix Contact USA
586 Fulling Mill Road
Middletown, PA 17057, United States
(+717) 944-1300
info@phoenixcon.com