HC-ADV-B06-HLWH-1STM20-EMC-AL - Housing

1413363

https://www.phoenixcontact.com/us/products/1413363

Please be informed that the data shown in this PDF document is generated from our online catalog. Please find the complete data in the user documentation. Our general terms of use for downloads are valid.



HEAVYCON ADVANCE sleeve housing, B6, with stainless steel screw locking (Allen screw), salt-water-resistant aluminum, height 74 mm, with 1x M20 thread, lateral cable outlet, without surface; conductive seal (EMC properties)

Commercial data

Item number	1413363
Packing unit	1 pc
Minimum order quantity	1 pc
Sales key	BF58
Product key	AF7APH
GTIN	4055626029962
Weight per piece (including packing)	207.2 g
Weight per piece (excluding packing)	205 g
Customs tariff number	85389099
Country of origin	PL

Technical data

Notes

General	For contact inserts HC-B6, BB10, DD24, M

Product properties

Product type	Housing with screw locking
Housing type	Sleeve housing
Product family	HC-ADV
Application	Offshore/EMC
Type	B6
No. of cable outlets	1
Type of the screw connection	1x M20
Fixing screws	M6 (screw head: 5 mm Allen screw)
Cable outlet	lateral
Pg screw connection	none

Connection data

Tightening torque	3 Nm ... 5 Nm (for M6 mounting screws on the sleeve housing)

Dimensions

Dimensional drawing	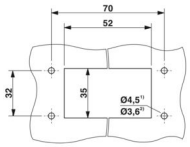
Width	57 mm
Height	74 mm
Length	92 mm

Installation dimensions

Width of the assembly cutout	35 mm
Length of the assembly cutout	52 mm

Material specifications

Seal material	NBR, conductive
Housing material	Die-cast aluminum, salt water resistant
Housing surface material	uncoated
Locking latch material	Stainless steel

Environmental and real-life conditions

Ambient conditions

Degree of protection	IP66
	IP68 (0.2 bar/24 h)

	IP69 (ISO 20653:2013-02)
Enclosure rating (NEMA)	4 (UL 50e)
	4X (UL 50e)
	12 (UL 50e)
Impact strength	IK09
Ambient temperature (operation)	-40 °C ... 125 °C

Mechanical properties

Mechanical data

Type of the screw connection	1x M20
Locking type	Screw

Mounting

Assembly note	In order to guarantee that the protective conductor contact functions even when plugged in at an angle, the two panel-mount flanges must have sufficient electrical contact with the metal mounting panel.
Fixing screws	M6 (screw head: 5 mm Allen screw)

Drawings

Dimensional drawing

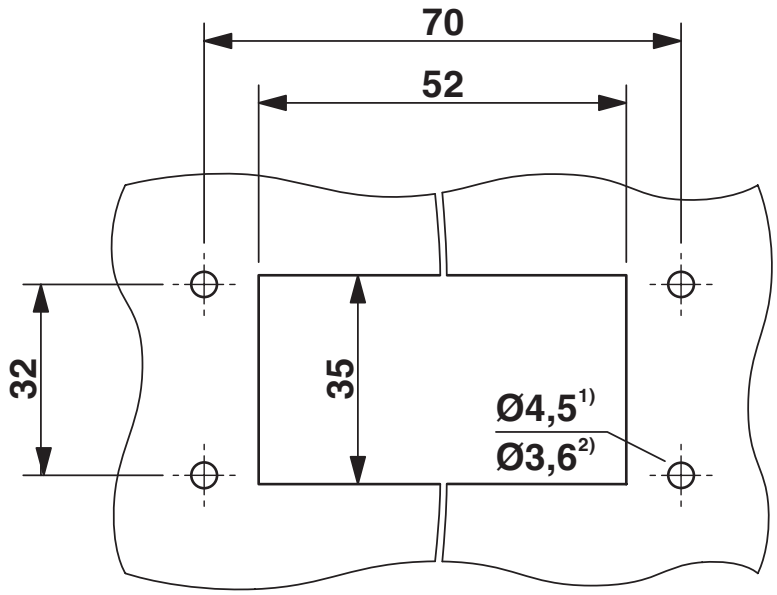

Mounting cutout
1) when M4 screws are used
2) when self-tapping Torx® screws are used (Torx® 20, M4)

Dimensional drawing

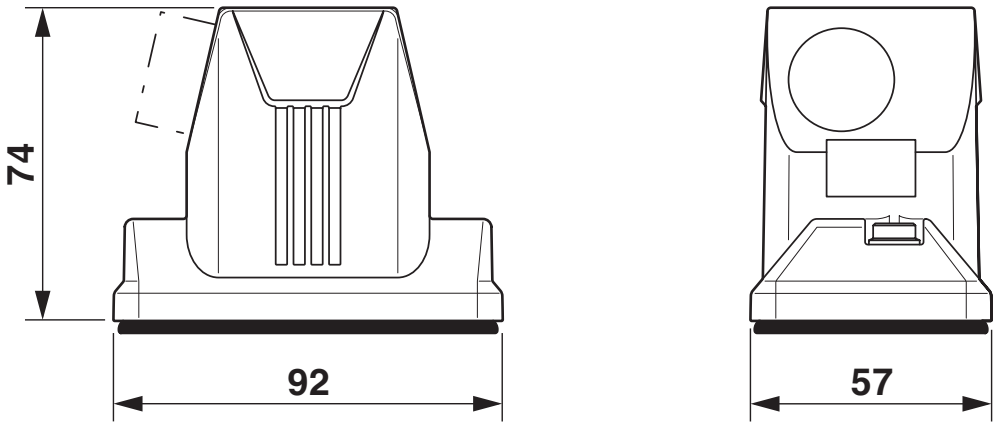

Dimensional drawing

Approvals

To download certificates, visit the product detail page: https://www.phoenixcontact.com/us/products/1413363

DNV
Approval ID: TAE000037S

cUL Recognized
Approval ID: E255026

UL Recognized
Approval ID: E255026

EAC
Approval ID: RU C-DE.AI30.B.01102

Classifications

ECLASS

ECLASS-13.0	27440202
ECLASS-15.0	27440202

ETIM

ETIM 10.0	EC000437

UNSPSC

UNSPSC 21.0	31261500

Environmental product compliance

EU RoHS

Fulfills EU RoHS substance requirements	Yes, No exemptions

China RoHS

Environment friendly use period (EFUP)	EFUP-E
	No hazardous substances above the limits

EU REACH SVHC

REACH candidate substance (CAS No.)	No substance above 0.1 wt%

EF3.1 Climate Change

CO2e kg	4.072 kg CO2e

Phoenix Contact 2026 © - all rights reserved
https://www.phoenixcontact.com

Phoenix Contact USA
586 Fulling Mill Road
Middletown, PA 17057, United States
(+717) 944-1300
info@phoenixcon.com