SACC-M12FR-5CON-PG 9-SH ADH - Connector

1411894

https://www.phoenixcontact.com/us/products/1411894

Please be informed that the data shown in this PDF document is generated from our online catalog. Please find the complete data in the user documentation. Our general terms of use for downloads are valid.



Connector, 5-pos., shielded, angled M12 socket, A-coded, screw connection with pin screws, knurl material: brass, nickel-plated, Pg9 cable gland, outer cable diameter of 6 mm ... 8 mm

Your advantages

- Safe use in the field, thanks to a high degree of protection
- Screw connection: proven connection technology for a large selection of different conductors
- Reliable signal transmission – 360° shielding in environments with electromagnetic interference

Commercial data

Item number	1411894
Packing unit	1 pc
Minimum order quantity	1 pc
Sales key	BF30
Product key	AF2CBA
GTIN	4046356944625
Weight per piece (including packing)	69.99 g
Weight per piece (excluding packing)	69.9 g
Customs tariff number	85366990
Country of origin	DE

Technical data

Notes

Assembly note	NOTE: Observe the permissible bending radii when routing cables, since the degree of protection may be at risk if the bending forces are too high. Reduce mechanical loads upstream of the connector, e.g., by using cable ties.

Mounting

Assembly note	The connector pin assignment can be rotated 90° to the cable outlet

Product properties

Product type	Circular connector (cable-side)
Number of positions	5
No. of cable outlets	1
Shielded	yes
Coding	A
Cable outlet	angled
Pg screw connection	Pg9

Insulation characteristics

Overvoltage category	II
Degree of pollution	3

Dimensions

External dimensions

Outside diameter	6 mm ... 8 mm

Material specifications

Flammability rating according to UL 94	HB
Seal material	NBR
Material of grip body	Zinc die-cast, nickel-plated
Contact material	CuZn
Contact surface material	Au
Contact carrier material	PA
Material for screw connection	Zinc die-cast, nickel-plated

Connection data

Conductor connection

Connection method	Screw connection
Connection cross section	0.25 mm² ... 0.75 mm²
Connection cross section AWG	24 ... 18
Stripping length of the individual wire	5 mm

Tightening torque	0.4 Nm (M12 knurl)
	0.2 Nm (Screw terminal blocks)
	0.8 Nm ... 1 Nm (Pressure nut with coupling sleeve)

Electrical properties

Insulation resistance	≥ 100 MΩ
Nominal voltage U_N	60 V DC
	48 V AC
Nominal current I_N	4 A

Mechanical properties

Mechanical data

Insertion/withdrawal cycles	≥ 50

Connector

Connection 1

Head design	Socket
Head cable outlet	angled
Head thread type	M12
Coding	A

Environmental and real-life conditions

Ambient conditions

Degree of protection	IP67
Ambient temperature (operation)	-40 °C ... 85 °C (Plug / socket)

Standards and regulations

Standard designation	M12 connector
Standards/specifications	IEC 61076-2-101

Drawings

Dimensional drawing

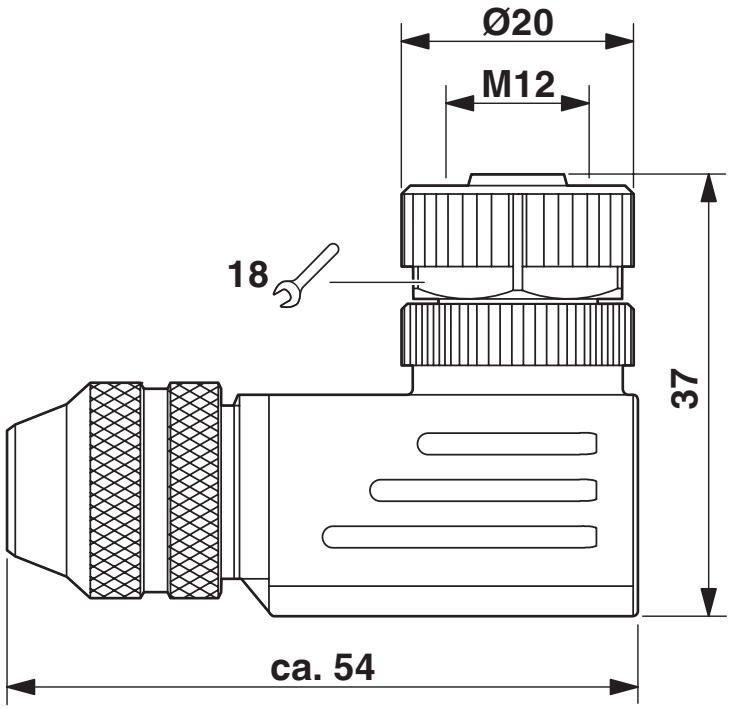

M12 x 1 socket, angled, shielded

Functional drawing

Assembly steps for M 12 male/female connector and conductor

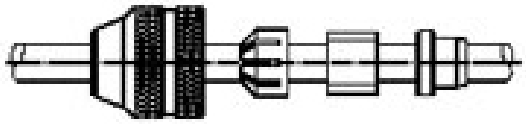

Slide parts onto the conductor

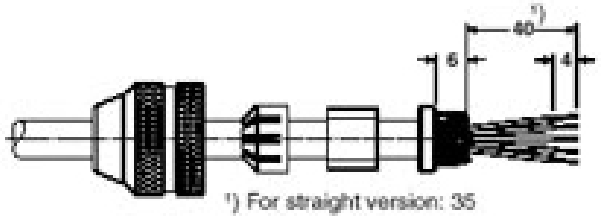

1) For straight version: 35

Strip conductor, widen shield and lay around the shielding ring, cut off projecting mesh.

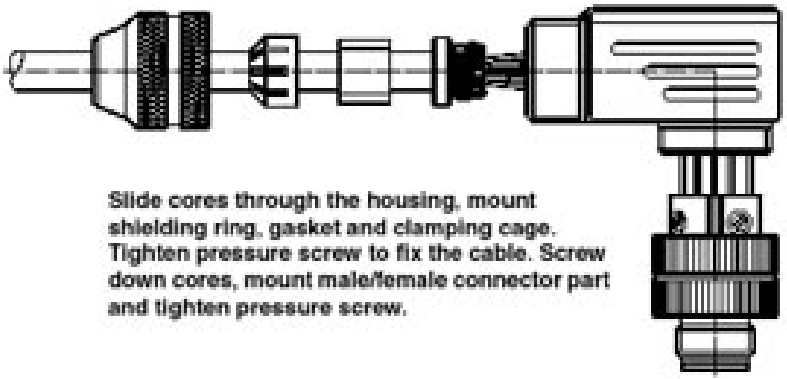

Slide cores through the housing, mount shielding ring, gasket and clamping cage. Tighten pressure screw to fix the cable. Screw down cores, mount male/female connector part and tighten pressure screw.

Schematic diagram

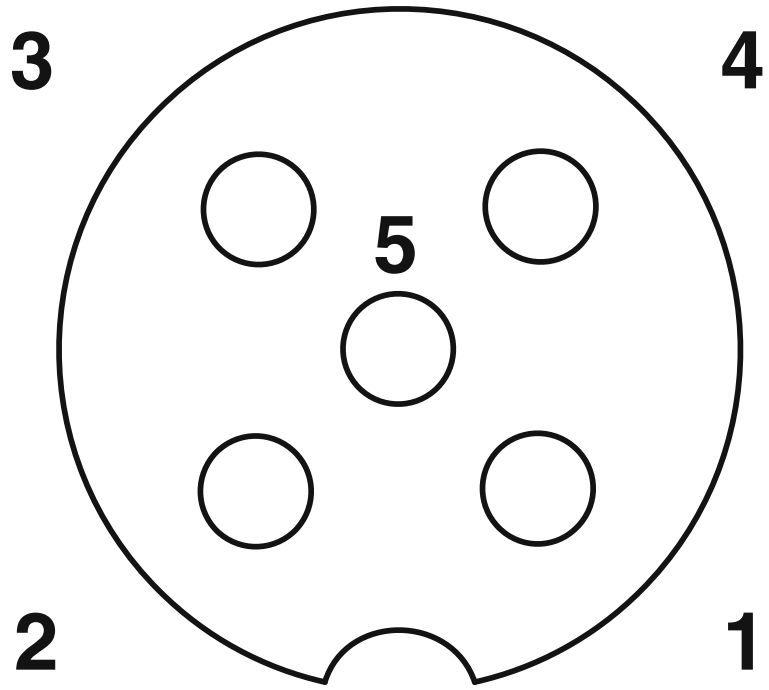

Pin assignment M12 socket, 5-pos., A-coded, socket side view

Schematic diagram

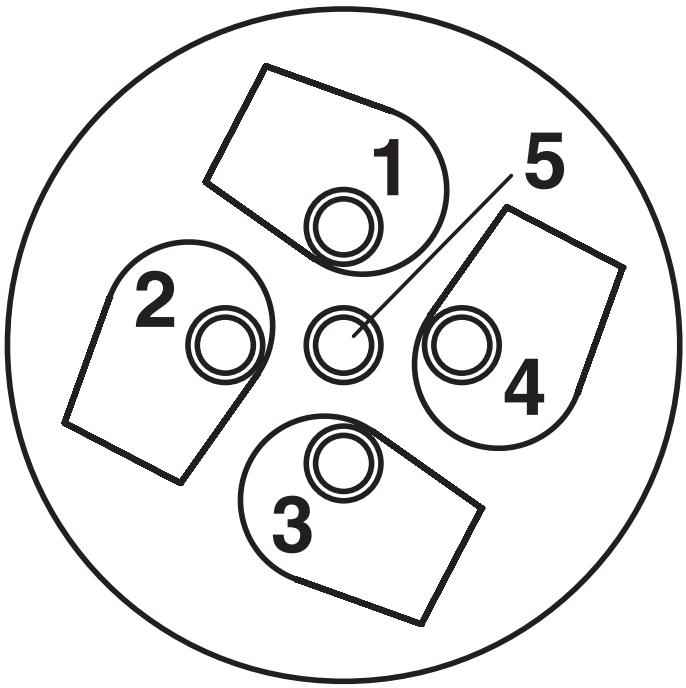

Cable connection side M12 (screw connection)

Classifications

ECLASS

ECLASS-13.0	27440116
ECLASS-15.0	27440116

ETIM

ETIM 10.0	EC002635

UNSPSC

UNSPSC 21.0	39121400

Environmental product compliance

EU RoHS

Fulfills EU RoHS substance requirements	Yes
Exemption	6(c)

China RoHS

Environment friendly use period (EFUP)	EFUP-50
	An article-related China RoHS declaration table can be found in the download area for the respective article under "Manufacturer declaration". For all articles with EFUP-E, no China RoHS declaration table issued and required.

EU REACH SVHC

REACH candidate substance (CAS No.)	Lead(CAS: 7439-92-1)
SCIP	144f0360-e32d-42c0-be11-e1b39e9fbc3f

EF3.1 Climate Change

CO2e kg	1.801 kg CO2e

Phoenix Contact 2026 © - all rights reserved
https://www.phoenixcontact.com

Phoenix Contact USA
586 Fulling Mill Road
Middletown, PA 17057, United States
(+717) 944-1300
info@phoenixcon.com