SAC-3P-M12MRS/10,0-PVC PE - Power cable

1411643

https://www.phoenixcontact.com/us/products/1411643

Please be informed that the data shown in this PDF document is generated from our online catalog. Please find the complete data in the user documentation. Our general terms of use for downloads are valid.



Power cable, 3-position, PVC, black, Plug angled M12, coding: S, on free cable end, cable length: 10 m, For alternating current up to 16 A/690 V

Your advantages

- Easy and safe: 100 % electrically tested plug-in components
- Protection against incorrect connection using special S-coding

Commercial data

Item number	1411643
Packing unit	1 pc
Minimum order quantity	1 pc
Note	Made to order (non-returnable)
Sales key	BF05
Product key	AF1CBB
GTIN	4046356937474
Weight per piece (including packing)	871.4 g
Weight per piece (excluding packing)	871.4 g
Customs tariff number	85444290
Country of origin	DE

Technical data

Product properties

Product type	Power cable
Application	Energy supply
Number of positions	3
No. of cable outlets	1
Shielded	no
Coding	S

Insulation characteristics

Overvoltage category	III
Degree of pollution	3

Material specifications

Flammability rating according to UL 94	V0
Material of grip body	PP
Contact material	CuZn
Contact surface material	Ni/Au
Contact carrier material	PA
Material for screw connection	Zinc die-cast, nickel-plated

Electrical properties

Insulation resistance	≥ 100 MΩ
Nominal voltage U_N	690 V AC
Nominal current I_N	16 A

Mechanical properties

Mechanical data

Insertion/withdrawal cycles	> 100

Connector

Connection 1

Type	Plug angled M12
Coding type	S (Power)

Connection 2

Type	free cable end

Cable/line

Cable length	10 m

PVC black [PVC]

Dimensional drawing	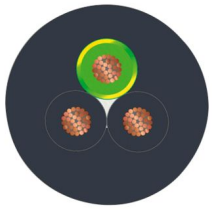
Cable weight	80 kg/km
UL AWM Style	2517 (105 °C / 300 V)
Number of positions	3
Shielded	no
Cable type	PVC black [PVC]
Conductor structure, voltage supply	30x 0.25 mm
AWG power supply	16
Conductor cross-section	3x 1.5 mm²
Wire diameter incl. insulation	2.4 mm ±0.1 mm
External cable diameter	6.80 mm ±0.2 mm
Outer sheath, material	PVC
External sheath, color	black
Conductor material	Bare Cu litz wires
Material wire insulation	PVC
Single wire, color	black 1, black 2, green/yellow
Overall twist	3 wires, twisted
Max. conductor resistance	≤ 13.3 Ω/km (at 20 °C)
Insulation resistance	≥ 10 MΩ*km (at 20 °C)
Nominal voltage, cable	300 V AC
Test voltage	2000 V AC
Minimum bending radius, fixed installation	5 x D
Minimum bending radius, flexible installation	12 x D
Smallest bending radius, fixed installation	34 mm
Smallest bending radius, movable installation	82 mm
Flame resistance	according to IEC 60332-1
	According to DIN EN 60332-1-2
	According to VW-1
	According to FT1
Ambient temperature (operation)	-40 °C ... 90 °C (cable, fixed installation)
	-5 °C ... 90 °C (Cable, flexible installation)

Environmental and real-life conditions

Ambient conditions

Degree of protection	IP65
	IP67 (without preloading, as additional test in accordance with IEC 60529)

Ambient temperature (operation) (male connector/female connector)	-25 °C ... 85 °C (Plug / socket)

Standards and regulations

Standard designation	M12 connector
Standards/specifications	IEC 61076-2-111

Drawings

Dimensional drawing

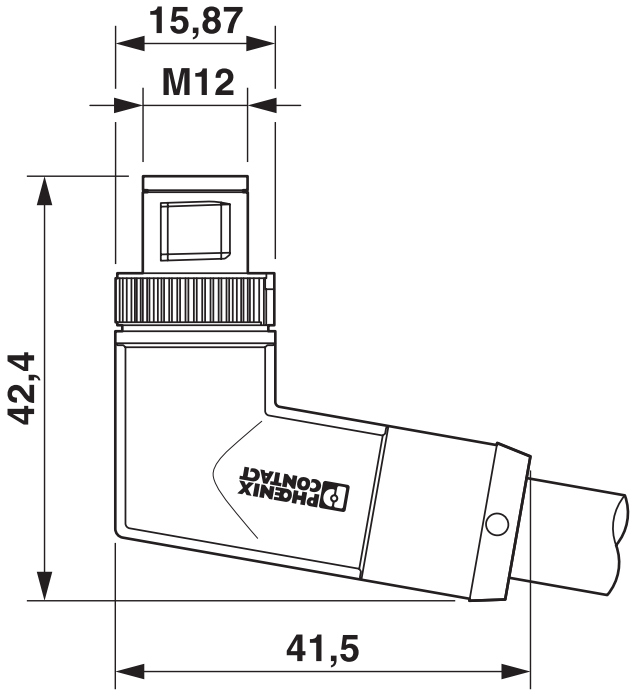

M12 x 1 male plug, angled

Schematic diagram

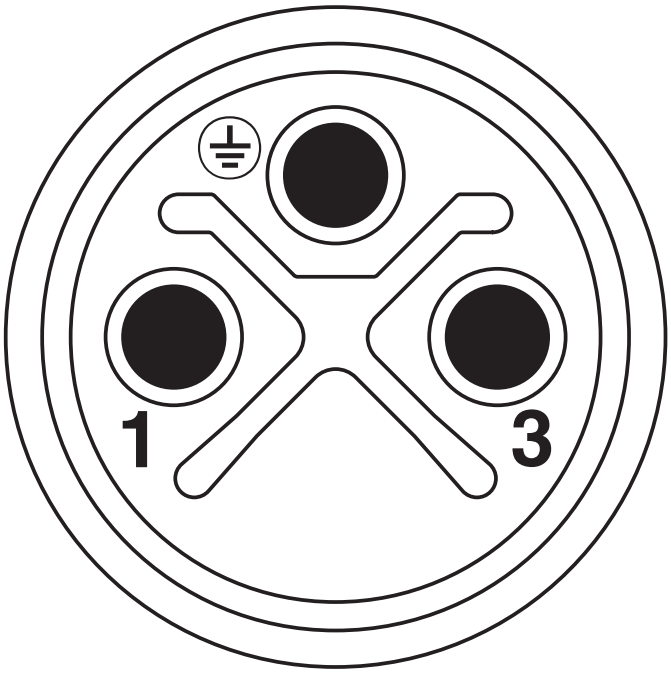

Pin assignment of M12 plug, 3-pos., S-coded, view of pin side

Circuit diagram

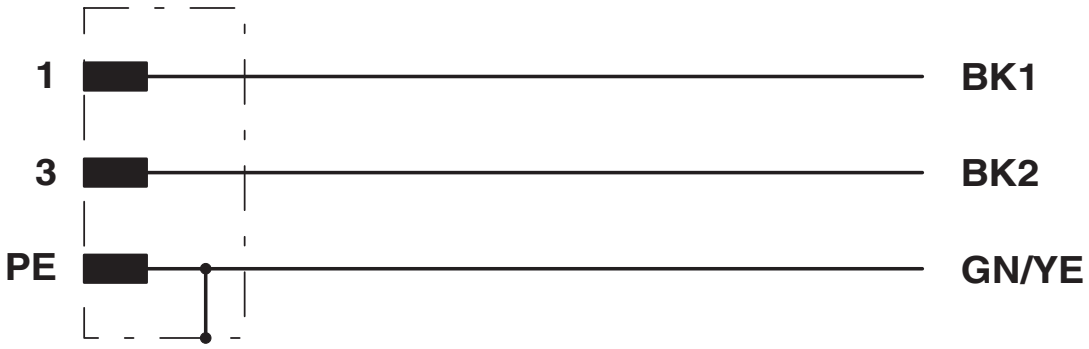

Contact assignment of the M12 plug

Classifications

ECLASS

ECLASS-13.0	27060327
ECLASS-15.0	27060327

ETIM

ETIM 10.0	EC001855

UNSPSC

UNSPSC 21.0	26121600

Environmental product compliance

EU RoHS

Fulfills EU RoHS substance requirements	Yes, No exemptions

China RoHS

Environment friendly use period (EFUP)	EFUP-E
	No hazardous substances above the limits

EU REACH SVHC

REACH candidate substance (CAS No.)	No substance above 0.1 wt%

Phoenix Contact 2026 © - all rights reserved
https://www.phoenixcontact.com

Phoenix Contact USA
586 Fulling Mill Road
Middletown, PA 17057, United States
(+717) 944-1300
info@phoenixcon.com