QPD QSK GY 5X6,0 FS - Protective cap

1411401

https://www.phoenixcontact.com/us/products/1411401

Please be informed that the data shown in this PDF document is generated from our online catalog. Please find the complete data in the user documentation. Our general terms of use for downloads are valid.

Protective cap, plastic, for QUICKON connection, gray, with retaining cord, IP68



Commercial data

Item number	1411401
Packing unit	1 pc
Minimum order quantity	1 pc
Sales key	BF50
Product key	AF6ZWX
GTIN	4046356932042
Weight per piece (including packing)	25.1 g
Weight per piece (excluding packing)	25.1 g
Customs tariff number	39269097
Country of origin	PL

Technical data

Product properties

Product type	Protective cap
Product family	QPD
Type	QPD
Retaining cord present	yes
Seal present	yes

Dimensions

Dimensional drawing	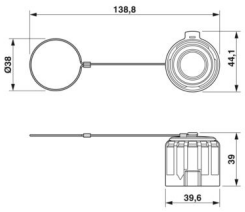
Width	39.6 mm
Height	39 mm
Length	39.6 mm
Diameter Retaining cord eyelet	38 mm (Retaining cord eyelet)

Material specifications

Material Protective cap	PBT
Flammability rating according to UL 94	V0

Environmental and real-life conditions

Ambient conditions

Degree of protection	IP66
	IP68 (2 m / 24 h)
	IP69K
Ambient temperature (operation)	-40 °C ... 100 °C
Ambient temperature (storage/transport)	-40 °C ... 100 °C

Drawings

Dimensional drawing

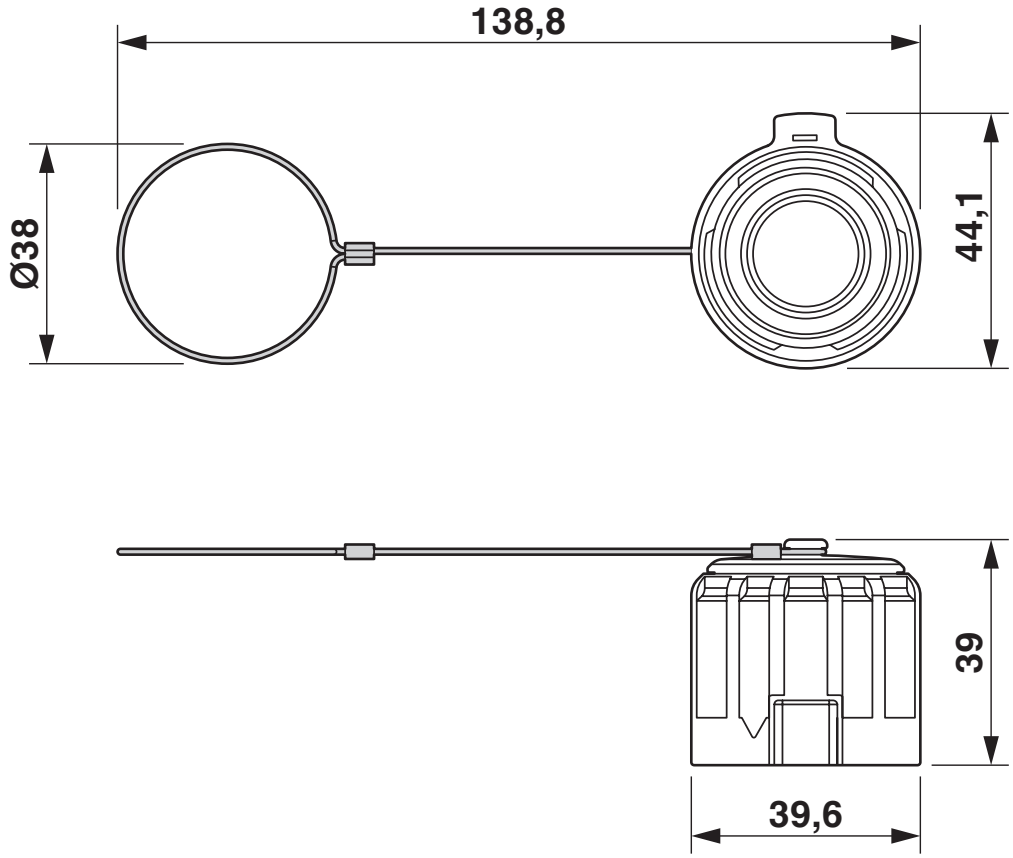

Approvals

To download certificates, visit the product detail page: https://www.phoenixcontact.com/us/products/1411401

DNV GL
Approval ID: TAE00003J5

Classifications

ECLASS

ECLASS-13.0	27440208
ECLASS-15.0	27440208

ETIM

ETIM 10.0	EC002314

UNSPSC

UNSPSC 21.0	39121400

Environmental product compliance

EU RoHS

Fulfills EU RoHS substance requirements	Yes, No exemptions

China RoHS

Environment friendly use period (EFUP)	EFUP-E
	No hazardous substances above the limits

EU REACH SVHC

REACH candidate substance (CAS No.)	No substance above 0.1 wt%

EF3.1 Climate Change

CO2e kg	0.726 kg CO2e

Phoenix Contact 2026 © - all rights reserved
https://www.phoenixcontact.com

Phoenix Contact USA
586 Fulling Mill Road
Middletown, PA 17057, United States
(+717) 944-1300
info@phoenixcon.com