A-INLE-M40-N-S - EMC nut

1411272

https://www.phoenixcontact.com/us/products/1411272

Please be informed that the data shown in this PDF document is generated from our online catalog. Please find the complete data in the user documentation. Our general terms of use for downloads are valid.

EMC nut, for threads M40 x 1.5, color: silver-colored



Commercial data

Item number	1411272
Packing unit	50 pc
Minimum order quantity	100 pc
Sales key	BF68
Product key	AF7DZX
GTIN	4046356924030
Weight per piece (including packing)	26.84 g
Weight per piece (excluding packing)	27.117 g
Customs tariff number	74198090
Country of origin	DE

Technical data

Product properties

Product type	Flat nut
Thread type	M40

Dimensions

Dimensional drawing	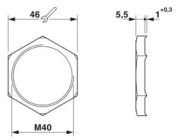
Length	6.5 mm
Diameter Connecting thread	40 mm
Connecting thread diameter	40 mm
Wrench size, counter nut	46 mm
Hexagon angular dimension	50 mm
Thread type connection side	M40 x 1.5
Thread pitch	1.5 mm

Material specifications

Material	Brass, nickel-plated

Cable/line

Halogen-free	yes

Environmental and real-life conditions

Ambient conditions

Ambient temperature (operation)	-70 °C ... 220 °C

Mounting

Assembly note	for EMC cable glands, for removing a non-conductive surface coating

Drawings

Dimensional drawing

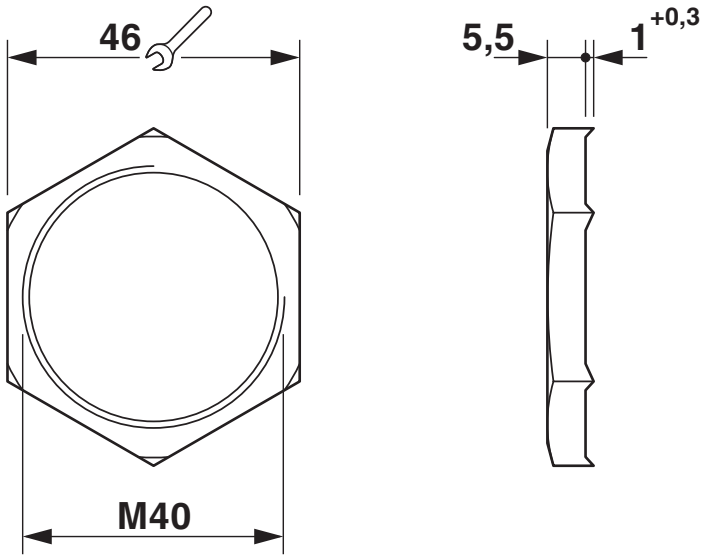

Classifications

ECLASS

ECLASS-13.0	27140807
ECLASS-15.0	27140807

ETIM

ETIM 10.0	EC003608

UNSPSC

UNSPSC 21.0	31161700

Environmental product compliance

EU RoHS

Fulfills EU RoHS substance requirements	Yes
Exemption	6(c)

China RoHS

Environment friendly use period (EFUP)	EFUP-50
	An article-related China RoHS declaration table can be found in the download area for the respective article under "Manufacturer declaration". For all articles with EFUP-E, no China RoHS declaration table issued and required.

EU REACH SVHC

REACH candidate substance (CAS No.)	Lead(CAS: 7439-92-1)
SCIP	ce1899d7-2e3c-4085-a3b1-0361a4b2099c

EF3.1 Climate Change

CO2e kg	0.074 kg CO2e

Phoenix Contact 2026 © - all rights reserved
https://www.phoenixcontact.com

Phoenix Contact USA
586 Fulling Mill Road
Middletown, PA 17057, United States
(+717) 944-1300
info@phoenixcon.com