# A-INLE-M25-N-S - EMC nut

1411270

https://www.phoenixcontact.com/us/products/1411270

Please be informed that the data shown in this PDF document is generated from our online catalog. Please find the complete data in the user documentation. Our general terms of use for downloads are valid.

EMC nut, for threads M25 x 1.5, color: silver-colored



## Commercial data

| | |
|---|---|
| Item number | 1411270 |
| Packing unit | 50 pc |
| Minimum order quantity | 100 pc |
| Sales key | BF68 |
| Product key | AF7DZX |
| GTIN | 4046356924016 |
| Weight per piece (including packing) | 10.54 g |
| Weight per piece (excluding packing) | 10.54 g |
| Customs tariff number | 74153300 |
| Country of origin | DE |

## Technical data

### Product properties

| | |
|---|---|
| Product type | Flat nut |
| Thread type | M25 |

### Dimensions

| | |
|---|---|
| Dimensional drawing | 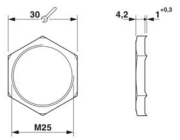 |
| Length | 5.2 mm |
| Diameter Connecting thread | 25 mm |
| Connecting thread diameter | 25 mm |
| Wrench size, counter nut | 30 mm |
| Hexagon angular dimension | 33.5 mm |
| Thread type connection side | M25 x 1.5 |
| Thread pitch | 1.5 mm |

### Material specifications

| | |
|---|---|
| Material | Brass, nickel-plated |

### Cable/line

| | |
|---|---|
| Halogen-free | yes |

### Environmental and real-life conditions

Ambient conditions

| | |
|---|---|
| Ambient temperature (operation) | -70 °C ... 220 °C |

### Mounting

| | |
|---|---|
| Assembly note | for EMC cable glands, for removing a non-conductive surface coating |

## Drawings

Dimensional drawing

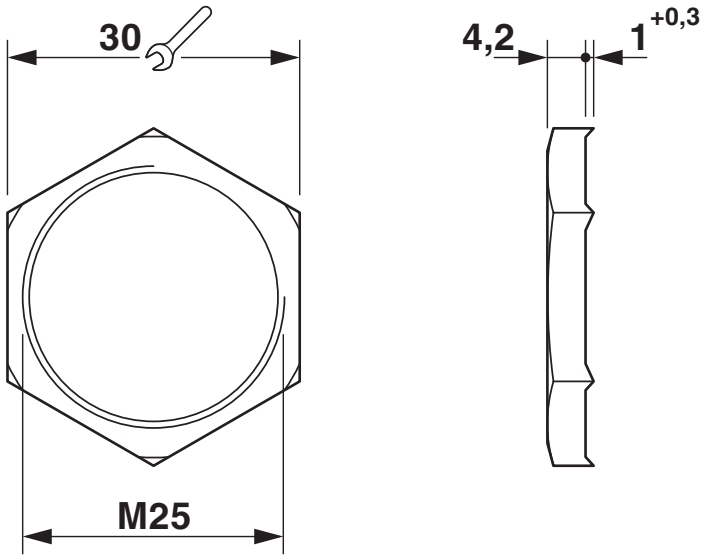

## Classifications

### ECLASS

| | |
|---|---|
| ECLASS-13.0 | 27140807 |
| ECLASS-15.0 | 27140807 |

### ETIM

| | |
|---|---|
| ETIM 10.0 | EC003608 |

### UNSPSC

| | |
|---|---|
| UNSPSC 21.0 | 31161700 |

## Environmental product compliance

EU RoHS

| | |
|---|---|
| Fulfills EU RoHS substance requirements | Yes |
| Exemption | 6(c) |

China RoHS

| | |
|---|---|
| Environment friendly use period (EFUP) | EFUP-50 |
| | An article-related China RoHS declaration table can be found in the download area for the respective article under "Manufacturer declaration". For all articles with EFUP-E, no China RoHS declaration table issued and required. |

EU REACH SVHC

| | |
|---|---|
| REACH candidate substance (CAS No.) | Lead(CAS: 7439-92-1) |
| SCIP | 6840cc75-9800-42e5-9228-1eb58b961beb |

EF3.1 Climate Change

| | |
|---|---|
| CO2e kg | 0.03 kg CO2e |


Phoenix Contact 2026 © - all rights reserved
https://www.phoenixcontact.com



Phoenix Contact USA
586 Fulling Mill Road
Middletown, PA 17057, United States
(+717) 944-1300
info@phoenixcon.com