REDUC-K-KV-M25/M20 BK - Reducing adapter

1411232

https://www.phoenixcontact.com/us/products/1411232

Please be informed that the data shown in this PDF document is generated from our online catalog. Please find the complete data in the user documentation. Our general terms of use for downloads are valid.



Reducing adapter, connecting thread: M25 x 1.5, color: jet black, with flat gasket

Product description

Reduced M25 to M20

Commercial data

Item number	1411232
Packing unit	10 pc
Minimum order quantity	10 pc
Sales key	BF68
Product key	AF7DZX
GTIN	4046356914147
Weight per piece (including packing)	6 g
Weight per piece (excluding packing)	5.74 g
Customs tariff number	39269097
Country of origin	DE

Technical data

Product properties

Product type	Reducing adapter
Seal present	yes

Connection data

Tightening torque	3.5 ... 5 Nm

Dimensions

Dimensional drawing	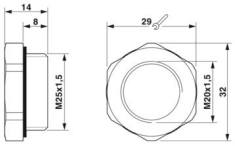
Width	32.00 mm
Length	14 mm
Length of the connecting thread	8 mm
Length without connecting thread	6 mm
Diameter Connecting thread	25 mm
Connecting thread diameter	25 mm
Wrench size, union nut	29 mm
Hexagon angular dimension	32 mm
Thread type connection side	M25 x 1.5
Thread pitch	1.5 mm
Thread type on seal side	M20

Material specifications

Color	black (RAL 9005)
Material	Polyamide fiberglass reinforced
Flammability rating according to UL 94	HB
Seal material	NBR (Flat gasket)

Cable/line

Halogen-free	no

Environmental and real-life conditions

Ambient conditions

Degree of protection	IP65 (Depends on the screw connection used)
Ambient temperature (operation)	-30 °C ... 100 °C

Mounting

Assembly note	With corresponding screw connection: IP65

Drawings

Dimensional drawing

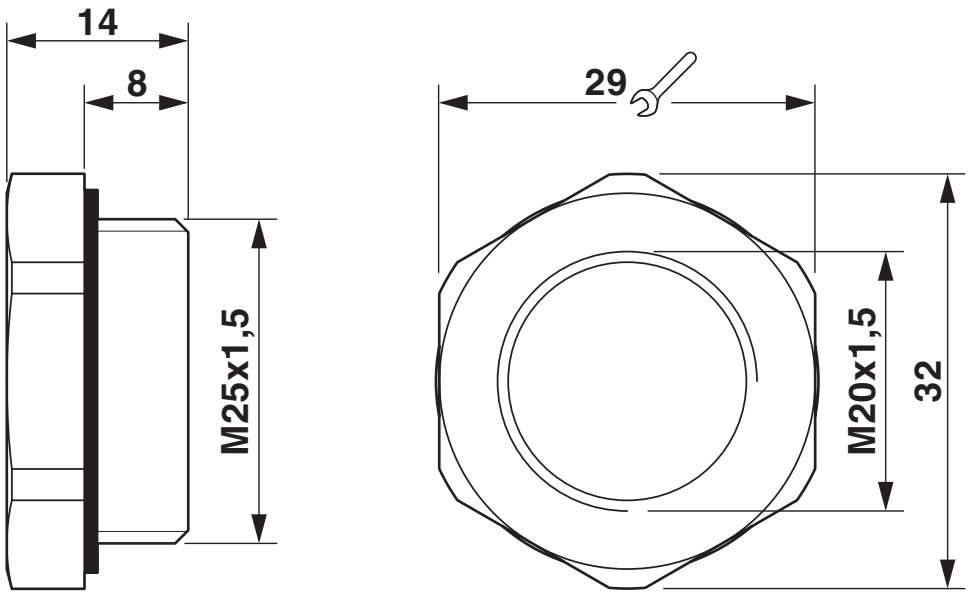

Dimensional drawing

Classifications

ECLASS

ECLASS-13.0	27140806
ECLASS-15.0	27140806

ETIM

ETIM 10.0	EC000938

UNSPSC

UNSPSC 21.0	31261500

Environmental product compliance

EU RoHS

Fulfills EU RoHS substance requirements	Yes, No exemptions

China RoHS

Environment friendly use period (EFUP)	EFUP-E
	No hazardous substances above the limits

EU REACH SVHC

REACH candidate substance (CAS No.)	No substance above 0.1 wt%

EF3.1 Climate Change

CO2e kg	0.054 kg CO2e

Phoenix Contact 2026 © - all rights reserved
https://www.phoenixcontact.com

Phoenix Contact USA
586 Fulling Mill Road
Middletown, PA 17057, United States
(+717) 944-1300
info@phoenixcon.com