A-INL-M32-P-BK - Counter nut

1411217

https://www.phoenixcontact.com/us/products/1411217

Please be informed that the data shown in this PDF document is generated from our online catalog. Please find the complete data in the user documentation. Our general terms of use for downloads are valid.

Counter nut, for threads M32 x 1.5, color: jet black



Commercial data

Item number	1411217
Packing unit	5 pc
Minimum order quantity	1 pc
Sales key	BF68
Product key	AF7DZX
GTIN	4046356923491
Weight per piece (including packing)	5.88 g
Weight per piece (excluding packing)	5.88 g
Customs tariff number	39269097
Country of origin	TR

Technical data

Product properties

Product type	Flat nut
Thread type	M32

Dimensions

Dimensional drawing	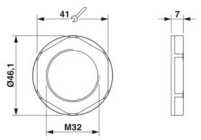
Length	7 mm
Diameter Connecting thread	32 mm
Connecting thread diameter	32 mm
Wrench size, counter nut	41 mm
Hexagon angular dimension	46.1 mm
Thread type connection side	M32 x 1.5
Thread pitch	1.5 mm

Material specifications

Material	PA
Flammability rating according to UL 94	V2

Cable/line

Halogen-free	yes

Environmental and real-life conditions

Ambient conditions

Ambient temperature (operation)	-40 °C ... 100 °C

Drawings

Dimensional drawing

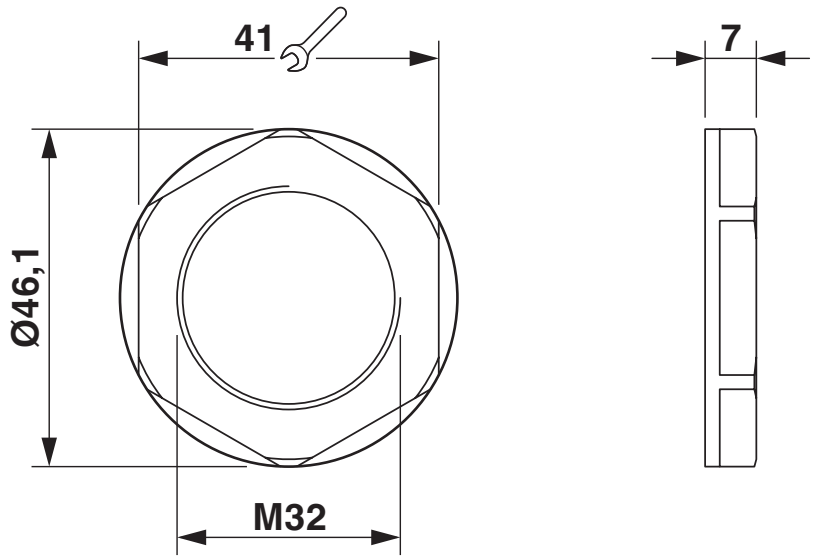

Classifications

ECLASS

ECLASS-13.0	27140807
ECLASS-15.0	27140807

ETIM

ETIM 10.0	EC003608

UNSPSC

UNSPSC 21.0	31161700

Environmental product compliance

EU RoHS

Fulfills EU RoHS substance requirements	Yes, No exemptions

China RoHS

Environment friendly use period (EFUP)	EFUP-E
	No hazardous substances above the limits

EU REACH SVHC

REACH candidate substance (CAS No.)	No substance above 0.1 wt%

EF3.1 Climate Change

CO2e kg	0.065 kg CO2e

Phoenix Contact 2026 © - all rights reserved
https://www.phoenixcontact.com

Phoenix Contact USA
586 Fulling Mill Road
Middletown, PA 17057, United States
(+717) 944-1300
info@phoenixcon.com