HC-HPR-B06-SHFH-2SSM25-EMR-BK - Housing

1411135

https://www.phoenixcontact.com/us/products/1411135

Please be informed that the data shown in this PDF document is generated from our online catalog. Please find the complete data in the user documentation. Our general terms of use for downloads are valid.



HEAVYCON B6 box mounting base, for screw locking, HPR series, with 2 x M25 gland, for increased environmental and EMC requirements

Your advantages

- Vibration and shock: IEC 61373/EN 50155, category 1, class 1B

Commercial data

Item number	1411135
Packing unit	1 pc
Minimum order quantity	1 pc
Sales key	BF60
Product key	AF7AAI
GTIN	4046356921459
Weight per piece (including packing)	820 g
Weight per piece (excluding packing)	772.4 g
Customs tariff number	85389099
Country of origin	CN

Technical data

Notes

General	For contact inserts HC-B6, BB10, DD24, M

Product properties

Product type	Housing with screw locking
Housing type	Surface mounting housing
Product family	HC-HPR-B
Series	HPR-B6
Application	Railway applications
Type	B6
No. of cable outlets	2
Type of the screw connection	2x M25
Protective cover	no
Cable outlet	lateral
Pg screw connection	none

Connection data

Tightening torque	10 Nm ... 15 Nm (for M8 mounting screws on the surface-mount housing)

Dimensions

Dimensional drawing	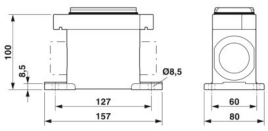
Width	80 mm
Height	100 mm
Length	157 mm
Drill hole distance, horizontal	127 mm
Drill hole distance, vertical	60 mm
Hole diameter	8.5 mm

Material specifications

Seal material	NBR (Profile gasket (O-ring))
Housing material	Die-cast aluminum
Housing surface material	Powder-coated, black

Environmental and real-life conditions

Ambient conditions	
	IP66

Degree of protection	IP68 (0.5 bar / 24 h)
	IP69 (ISO 20653:2013-02)
Impact strength	IK09
Ambient temperature (operation)	-40 °C ... 125 °C

Mechanical properties

Mechanical data

Type of the screw connection	2x M25
Locking type	Nut

Drawings

Dimensional drawing

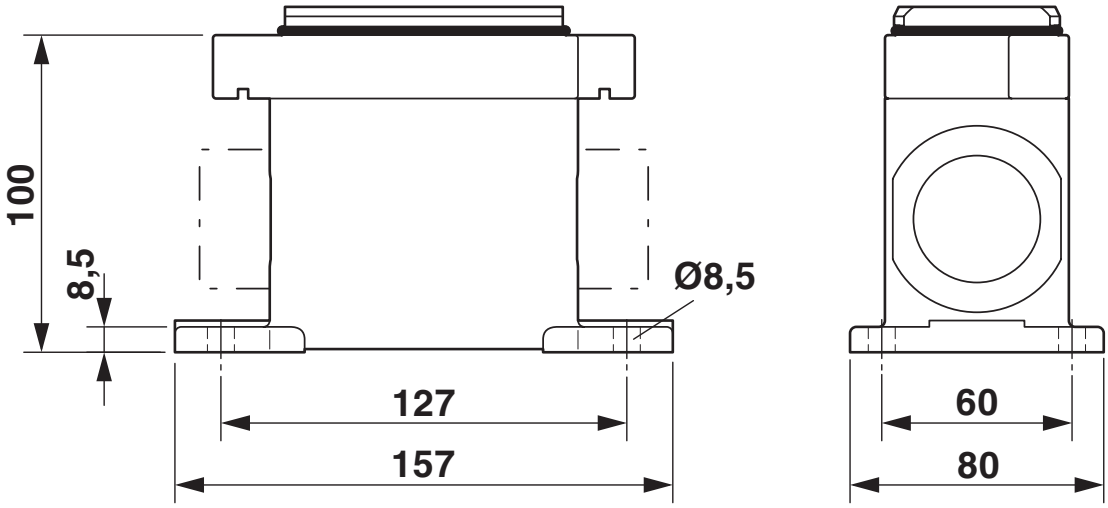

Dimensional drawing

Approvals

To download certificates, visit the product detail page: https://www.phoenixcontact.com/us/products/1411135

DNV
Approval ID: TAE000037S

EAC
Approval ID: RU C-DE.AI30.B.01102

Classifications

ECLASS

ECLASS-13.0	27440202
ECLASS-15.0	27440202

ETIM

ETIM 10.0	EC000437

UNSPSC

UNSPSC 21.0	31261500

Environmental product compliance

EU RoHS

Fulfills EU RoHS substance requirements	Yes, No exemptions

China RoHS

Environment friendly use period (EFUP)	EFUP-E
	No hazardous substances above the limits

EU REACH SVHC

REACH candidate substance (CAS No.)	No substance above 0.1 wt%

EF3.1 Climate Change

CO2e kg	27.146 kg CO2e

Phoenix Contact 2026 © - all rights reserved
https://www.phoenixcontact.com

Phoenix Contact USA
586 Fulling Mill Road
Middletown, PA 17057, United States
(+717) 944-1300
info@phoenixcon.com