A-EXB-20-66L-N-S - Pressure compensation element

1411117

https://www.phoenixcontact.com/us/products/1411117

Please be informed that the data shown in this PDF document is generated from our online catalog. Please find the complete data in the user documentation. Our general terms of use for downloads are valid.



Pressure compensation element, application: Ex, connecting thread: M20 x 1.5, color: silver-colored

Your advantages

- Reduces the formation of condensation

Commercial data

Item number	1411117
Packing unit	5 pc
Minimum order quantity	1 pc
Sales key	BF68
Product key	AF7DDX
GTIN	4046356922326
Weight per piece (including packing)	101.46 g
Weight per piece (excluding packing)	98 g
Customs tariff number	74198090
Country of origin	GB

Technical data

Product properties

Product type	Pressure compensation element
Application	Ex
Manufacturer	CMP
Manufacturer Designation	781 M20(M) N.PLTD BREATH/DRAIN PLUG
Manufacturer product number	781EM25
Air flow rate	48 l/min (at 1 bar)

Connection data

Tightening torque	7 Nm (Installation torque)

Ex data

Suited for EX-applications	yes

Dimensions

Dimensional drawing	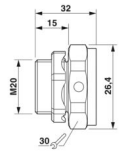
Length	32 mm
Length of the connecting thread	15 mm
Length without connecting thread	17 mm
Diameter Connecting thread	20 mm
Connecting thread diameter	20 mm
Wrench size, union nut	30 mm
Hexagon angular dimension	33 mm
Thread type connection side	M20 x 1.5
Thread pitch	1.5 mm

Material specifications

Color	brass color
Material	Brass, nickel-plated
Seal material	Silicon

Environmental and real-life conditions

Ambient conditions

Degree of protection	IP66
Ambient temperature (operation)	-60 °C ... 130 °C

Approvals

ATEX	Sira 10ATEX1307U
	781D: Ex II 2 GD Exd IIC Gb, Ex ta IIIC Da, 781E: Ex II 2 GD Exe IIC Gb, Ex ta IIIC Da
IECEx	IECEx SIR 10.0149U
	781D: Ex d IIC Gb, Ex ta IIIC Da 781E: Ex e IIC Gb, Ex ta IIIC Da

Standards and regulations

IEC Ex

Standards/specifications	IEC 60079-0, -1, -7, -31

EN Ex

Standards/specifications	EN 60079-0, -1, -7, -31

Mounting

Assembly note	Mount at the lowest point of the housing, including ribbed counter nut (ensure correct orientation when mounting, the grooved side must be pointing towards the wall)

Drawings

Dimensional drawing

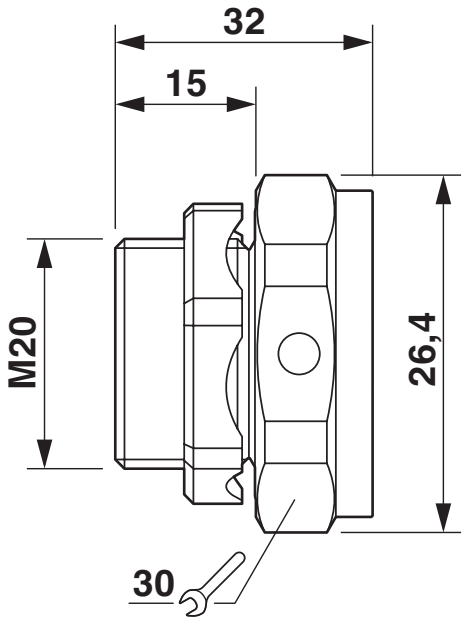

Approvals

To download certificates, visit the product detail page: https://www.phoenixcontact.com/us/products/1411117

EAC Ex
Approval ID: RU C-GB.AA87.B.00487

IECEx
Approval ID: IECEx SIR 10.0149U

CSA
Approval ID: 113642_0_000

CSAus
Approval ID: 113642_0_000

ATEX
Approval ID: CML 18ATEX1330U

Classifications

ECLASS

ECLASS-13.0	27440192
ECLASS-15.0	27440192

ETIM

ETIM 10.0	EC002943

UNSPSC

UNSPSC 21.0	39121400

Environmental product compliance

EU RoHS

Fulfills EU RoHS substance requirements	Yes
Exemption	6(c)

China RoHS

Environment friendly use period (EFUP)	EFUP-50
	An article-related China RoHS declaration table can be found in the download area for the respective article under "Manufacturer declaration". For all articles with EFUP-E, no China RoHS declaration table issued and required.

EU REACH SVHC

REACH candidate substance (CAS No.)	Lead(CAS: 7439-92-1)
SCIP	6d14b377-09c8-492b-bf7d-1e8c49fcc269

EF3.1 Climate Change

CO2e kg	2.021 kg CO2e

Phoenix Contact 2026 © - all rights reserved
https://www.phoenixcontact.com

Phoenix Contact USA
586 Fulling Mill Road
Middletown, PA 17057, United States
(+717) 944-1300
info@phoenixcon.com