G-ESS-M20-S66L-NTES-S - Cable gland

1411075

https://www.phoenixcontact.com/us/products/1411075

Please be informed that the data shown in this PDF document is generated from our online catalog. Please find the complete data in the user documentation. Our general terms of use for downloads are valid.



Cable gland, material for screw connection: Brass, nickel-plated, application: Ex, external cable diameter 6.5 mm ... 14 mm, shielding: no, connecting thread: M20 x 1.5, color: silver-colored

Product description

Cable gland, for unarmored cables

Your advantages

- Weatherproof sealing material

Commercial data

Item number	1411075
Packing unit	20 pc
Minimum order quantity	1 pc
Sales key	BF68
Product key	AF7DDX
GTIN	4046356921893
Weight per piece (including packing)	66.69 g
Weight per piece (excluding packing)	61 g
Customs tariff number	74198090
Country of origin	GB

Technical data

Mounting

Assembly note	Sealed to IP66/IP67/IP68 thanks to the use of the A-SEW-20-P-W flat gasket (item 1411283)

Product properties

Product type	Cable screw gland
Application	Ex
No. of conductors	1
Manufacturer	CMP
Manufacturer Designation	20 A2F N. PLTD GLAND
Manufacturer product number	20A2F1RA5
Shielded	no
Execution of the strain relief	B

Ex data

Cable types that can be used	for unarmored cables
Suited for EX-applications	yes

Characteristics

Category of shock impact	10
Design, Strain relief	B

Dimensions

Dimensional drawing	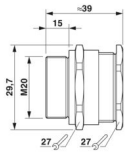
Length	39 mm
Length of the connecting thread	15 mm
Wrench size, union nut	27 mm
Wrench size, support	27 mm
Hexagon angular dimension	29.7 mm
Thread type connection side	M20 x 1.5
Thread pitch	1.5 mm

Material specifications

Color	brass color
Seal material	EPDM
Material for screw connection	Brass, nickel-plated

Cable/line

External cable diameter	6.5 mm ... 14 mm

Environmental and real-life conditions

Ambient conditions

Degree of protection	IP66 (using the corresponding A-SEW-...P-W flat gasket)
	IP67 (using the corresponding A-SEW-...P-W flat gasket)
	IP68 (using the corresponding A-SEW-...P-W flat gasket)
Ambient temperature (operation)	-60 °C ... 130 °C (static)

Approvals

ATEX	Sira 13ATEX1068X
	Sira 13ATEX4074X
	Ex II 2/3G, II 1D, Ex d IIC Gb, Ex e IIC Gb, Ex nR IIC Gc, Ex ta IIIC Da, Ex IM2 Ex d I Mb, Ex e I Mb
IECEx	IECEx SIR 13.0023X
	Ex d IIC Gb, Ex e IIC Gb, Ex nR IIC Gc, Ex ta IIIC Da, Ex d I Mb, Ex e I Mb

Standards and regulations

EN Ex

Standards/specifications	EN 60079-0, -1, -7, -15, -31

IEC Ex

Standards/specifications	IEC 60079-0, -1, -7, -15, -31

Cable glands

Standards/specifications	EN 50262

Cable glands

Standards/specifications	BS 6121: Part 1:1989

Cable glands

Standards/specifications	IEC 62444

Drawings

Dimensional drawing

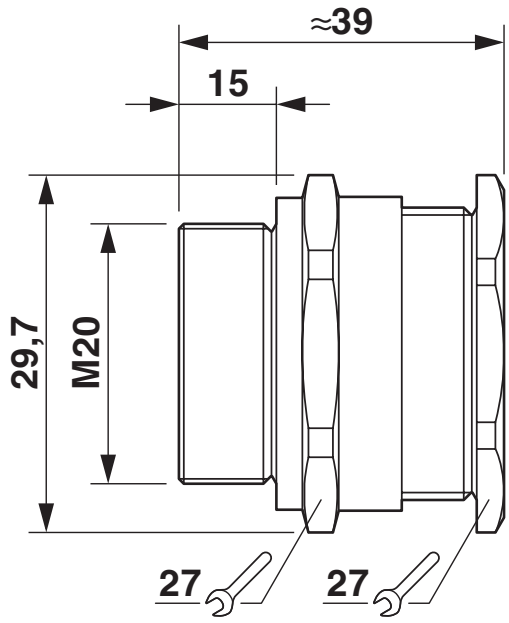

Dimensional drawing

Approvals

To download certificates, visit the product detail page: https://www.phoenixcontact.com/us/products/1411075

EAC Ex
Approval ID: RU C-GB.AA87.B.00487

IECEx
Approval ID: IECEx SIR 13.0023X

CSA
Approval ID: 101909_0_000

ATEX
Approval ID: CML 18ATEX1321X

ATEX
Approval ID: CML 18ATEX4313X

Classifications

ECLASS

ECLASS-13.0	27140802
ECLASS-15.0	27140802

ETIM

ETIM 10.0	EC000441

UNSPSC

UNSPSC 21.0	39121300

Environmental product compliance

EU RoHS

Fulfills EU RoHS substance requirements	Yes
Exemption	6(c)

China RoHS

Environment friendly use period (EFUP)	EFUP-50
	An article-related China RoHS declaration table can be found in the download area for the respective article under "Manufacturer declaration". For all articles with EFUP-E, no China RoHS declaration table issued and required.

EU REACH SVHC

REACH candidate substance (CAS No.)	Lead(CAS: 7439-92-1)
SCIP	37d80059-a777-495a-b9cf-c7033ce59c58

EF3.1 Climate Change

CO2e kg	0.379 kg CO2e

Phoenix Contact 2026 © - all rights reserved
https://www.phoenixcontact.com

Phoenix Contact USA
586 Fulling Mill Road
Middletown, PA 17057, United States
(+717) 944-1300
info@phoenixcon.com