QPD W 4PE6,0 M25 0,5 BK - Panel feed-through

1410396

https://www.phoenixcontact.com/us/products/1410396

Please be informed that the data shown in this PDF document is generated from our online catalog. Please find the complete data in the user documentation. Our general terms of use for downloads are valid.



QUICKON panel feed-through, 4+PE-pos., 2.5 mm^2 ... 6.0 mm^2/690 V/40 A, without QUICKON nut, black, M25 connection thread with 5 welded-on 6.0 mm^2 cable wires, 0.5 m long, cut flat at the end.

Your advantages

- Innovative and time saving - QUICKON fast connection for time saving of up to 80 % for on-site connection
- Robust throughout: housing with IP68/IP69K and IK07 protection for a wide range of applications
- Safer connection with mechanical coding to protect against mismatching, and touch-proof protection in accordance with DIN EN 0105
- Efficient - by using panel feed-throughs, devices no longer need to be opened in order to connect cables

Commercial data

Item number	1410396
Packing unit	1 pc
Minimum order quantity	1 pc
Sales key	BF50
Product key	AF6ACC
GTIN	4046356929356
Weight per piece (including packing)	212 g
Weight per piece (excluding packing)	208.8 g
Customs tariff number	85444290
Country of origin	PL

Technical data

Product properties

Product type	Panel feed-through
Product family	QPD
Type	QPD 5x6,0
Number of positions	5
Connection profile	4+PE
Position marking	1, 2, 3, N, PE
Number of connections	10
Number of connections per position	1
Coding	coded

Insulation characteristics

Overvoltage category	III
Degree of pollution	3

Connection data

Connection technology

Connection method On the device side	Single wires (Welded-on)
Connection method On the field side	IDC connection
Frequency of connections between conductors of the same cross section	max. 10

Conductor connection

Conductor cross-section flexibel	2.5 mm² ... 6 mm²
Conductor cross-section solid	2.5 mm² ... 6 mm²
Connection cross section AWG	14 ... 10
Tightening torque Union nut	15 Nm
Wrench size Union nut	30 mm

Dimensions

Dimensional drawing	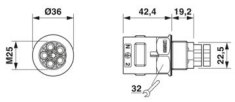
Width	36 mm
Height	36 mm
Length	61.6 mm
Diameter	36 mm
Wrench size	30 mm
Wrench size for mounting	30 mm

Electrical properties

Rated surge voltage (II/2)	8 kV
Rated surge voltage (III/2)	8 kV
Rated surge voltage (III/3)	6 kV
Rated current	40 A
Contact resistance	< 3 mΩ
rated voltage (II/2)	1000 V
rated voltage (III/2)	1000 V
Rated voltage (III/3)	690 V
Nominal voltage U_N	690 V AC
	690 V DC
Nominal current I_N	40 A

Mechanical properties

Mechanical data

Insertion/withdrawal cycles	max. 50

Material specifications

Color	black (RAL 9005)
Material Housing	PA
Material Contact	Cu
Material Contact surface	silver-plated
Flammability rating according to UL 94	V0
Material wire insulation	PVC/PE/TPE/rubber

Cable/line

Cable length	0.5 m
Structure of individual litz in acc. with VDE 0295 / smallest wire diameter	VDE 0295 class 1 to 6/min. 0.15 mm
Wire diameter including insulation	2.95 mm ... 5 mm
Position marking	1, 2, 3, N, PE
Single wire, color	black, brown, gray, blue, green/yellow
Cable cross section	6 mm²
Material wire insulation	PVC/PE/TPE/rubber

Mounting

Mounting type	Front mounting M25

Environmental and real-life conditions

Ambient conditions

Degree of protection	IP66
	IP68 (2 m / 24 h)
	IP69K
Impact strength	IK07
Ambient temperature (operation)	-40 °C ... 100 °C

Temperature when conductor connected	-5 °C ... 50 °C
Ambient temperature (storage/transport)	-40 °C ... 100 °C

Drawings

Dimensional drawing

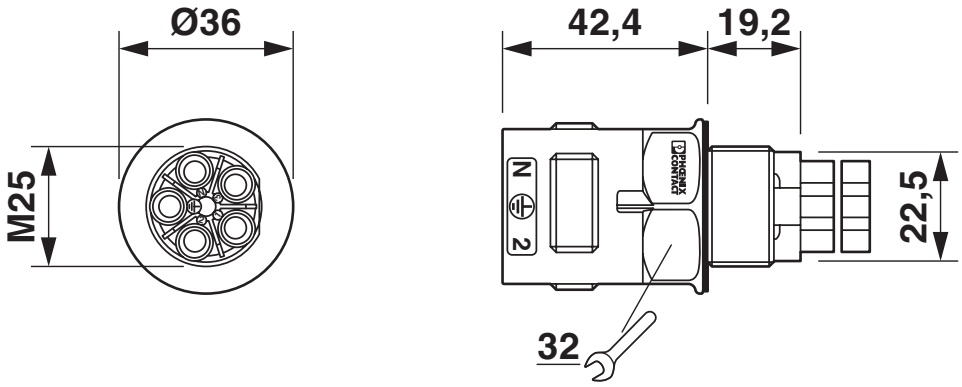

Dimensional drawing of QPD W 4PE6,0 M25

Dimensional drawing

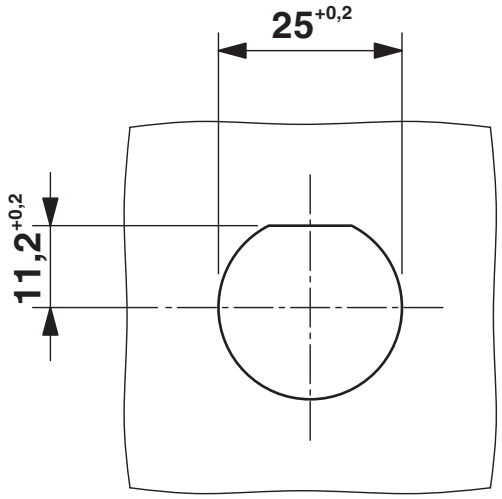

Panel cutout

Diagram

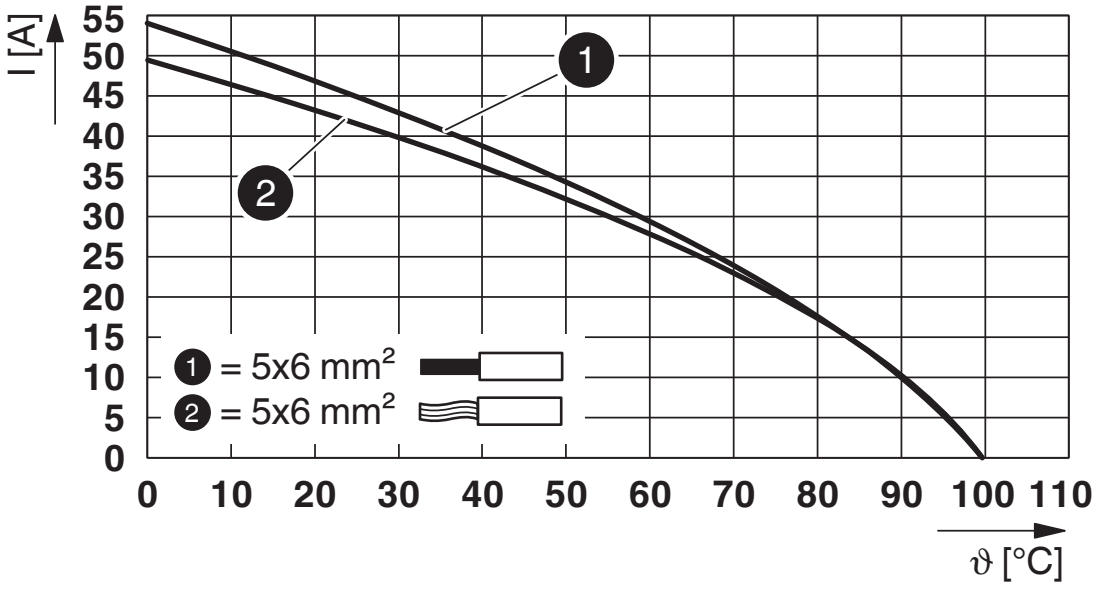

Derating diagram

Approvals

To download certificates, visit the product detail page: https://www.phoenixcontact.com/us/products/1410396

IECEE CB Scheme
Approval ID: DE1-65875

DNV GL
Approval ID: TAE00003J5

VDE Zeichengenehmigung
Approval ID: 40029149

UL Listed
Approval ID: E468743

	Nominal voltage U_N	Nominal current I_N	Cross section AWG	Cross section mm^2
keine				
	600 V	20 A	- 12	-

cUL Listed
Approval ID: E468743

	Nominal voltage U_N	Nominal current I_N	Cross section AWG	Cross section mm^2
keine				
	600 V	20 A	- 12	-

Classifications

ECLASS

ECLASS-13.0	27440602
ECLASS-15.0	27440602

ETIM

ETIM 10.0	EC002566

UNSPSC

UNSPSC 21.0	39121500

Environmental product compliance

EU RoHS

Fulfills EU RoHS substance requirements	Yes, No exemptions

China RoHS

Environment friendly use period (EFUP)	EFUP-E
	No hazardous substances above the limits

EU REACH SVHC

REACH candidate substance (CAS No.)	No substance above 0.1 wt%

Phoenix Contact 2026 © - all rights reserved
https://www.phoenixcontact.com

Phoenix Contact USA
586 Fulling Mill Road
Middletown, PA 17057, United States
(+717) 944-1300
info@phoenixcon.com