SAC-HZ-3P-M12MR/10,0-542 SH BK - Sensor/actuator cable

1409495

https://www.phoenixcontact.com/us/products/1409495

Please be informed that the data shown in this PDF document is generated from our online catalog. Please find the complete data in the user documentation. Our general terms of use for downloads are valid.



Sensor/actuator cable, 3-position, PVC, yellow, shielded, Plug angled M12, coding: A, on free cable end, cable length: 10 m

Commercial data

Item number	1409495
Packing unit	1 pc
Minimum order quantity	1 pc
Note	Made to order (non-returnable)
Sales key	BF13
Product key	AF1IGA
GTIN	4055626017396
Weight per piece (including packing)	22.22 g
Weight per piece (excluding packing)	22.22 g
Customs tariff number	85444290
Country of origin	US

SAC-HZ-3P-M12MR/10,0-542 SH BK - Sensor/actuator cable

1409495

https://www.phoenixcontact.com/us/products/1409495

Technical data

Notes

General	These cable assemblies are UL/cUL listed for use in Class I, Division 2 (CID2) hazardous locations.

Product properties

Product type	Sensor/actuator cable
Application	U.S. cables for hazardous locations
Number of positions	3
No. of cable outlets	1
Shielded	yes
Coding	A

Insulation characteristics

Overvoltage category	II
Degree of pollution	3

Material specifications

Material	TPE-U (Locking clip)
Flammability rating according to UL 94	HB
Seal material	NBR
Material of grip body	TPU, hardly inflammable, self-extinguishing
Contact material	CuSn
Contact surface material	Ni/Au
Contact carrier material	TPU GF
Material for screw connection	Zinc die-cast, nickel-plated
Outer sheath, material	PVC

Electrical properties

Insulation resistance	≥ 100 MΩ
Nominal voltage U_N	48 V AC
	60 V DC
Nominal current I_N	4 A

Mechanical properties

Mechanical data

Insertion/withdrawal cycles	≥ 100

Signaling

Status display	no
Status display present	no

Connection data

Conductor connection

Tightening torque	0.4 Nm (M12 connector)

Connector

Connection 1

Type	Plug angled M12
Coding type	A

Connection 2

Type	free cable end

Cable/line

Cable length	10 m

PVC yellow 105 °C [542]

Dimensional drawing	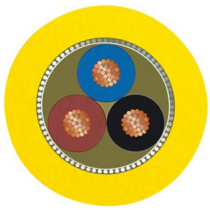
Cable weight	40 kg/km
UL AWM Style	2517 (105 °C / 300 V)
Number of positions	3
Shielded	yes
Cable type	PVC yellow 105 °C [542]
Conductor structure signal line	7x 0.25 mm
AWG signal line	22
Wire diameter incl. insulation	1.27 mm ±0.03 mm
External cable diameter	5.20 mm ±0.2 mm
Outer sheath, material	PVC
External sheath, color	yellow
Conductor material	Tin-plated Cu litz wires
Material wire insulation	PVC
Single wire, color	brown, blue, black
Overall twist	3 wires, twisted
Optical shield covering	85 %
Max. conductor resistance	max. 50.5 Ω/km (20 °C)
Insulation resistance	≥ (550 M Ohms/m @ 500V)
Nominal voltage, cable	300 V
Minimum bending radius, flexible installation	12 x D
Smallest bending radius, movable installation	63 mm

Flame resistance	FT4
Other resistance	UV resistant
Special properties	UL standards PLTC and ITC
Ambient temperature (operation)	-30 °C ... 105 °C (cable, fixed installation)
	-5 °C ... 105 °C (Cable, flexible installation)

Environmental and real-life conditions

Ambient conditions

Degree of protection	IP65
	IP67
	IP68
Ambient temperature (operation)	-25 °C ... 90 °C (Plug / socket)
Ambient temperature (operation) (Locking clip)	-40 °C ... 65 °C (Locking clip)

Approvals

Conformity/Approvals

UL, USA / Canada	Class I, Div. 2, Groups A, B, C, D

Standards and regulations

Standard designation	M12 connector
Standards/specifications	IEC 61076-2-101

Drawings

Dimensional drawing

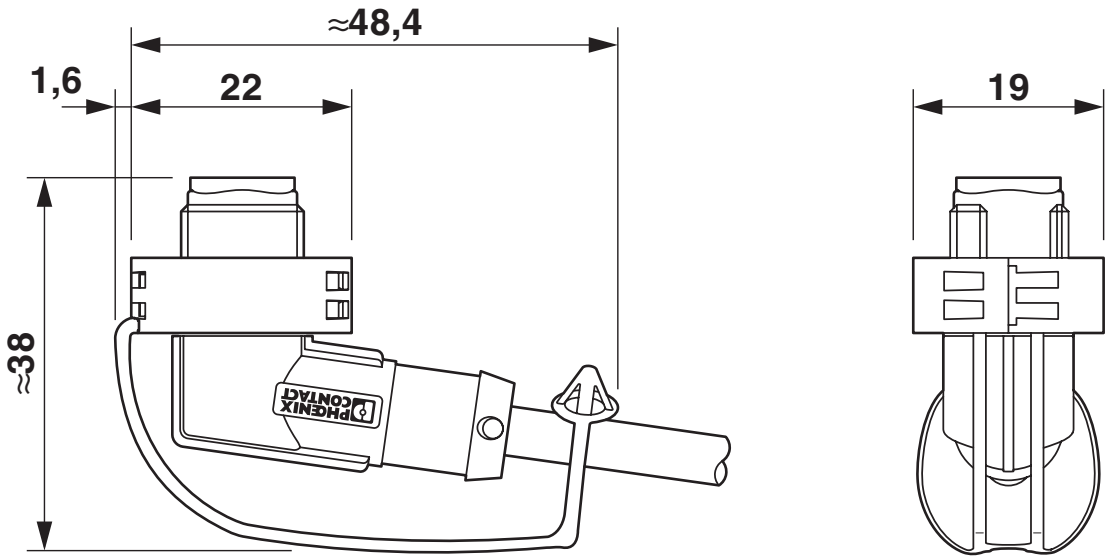

EXCLIP mounted plug

Dimensional drawing

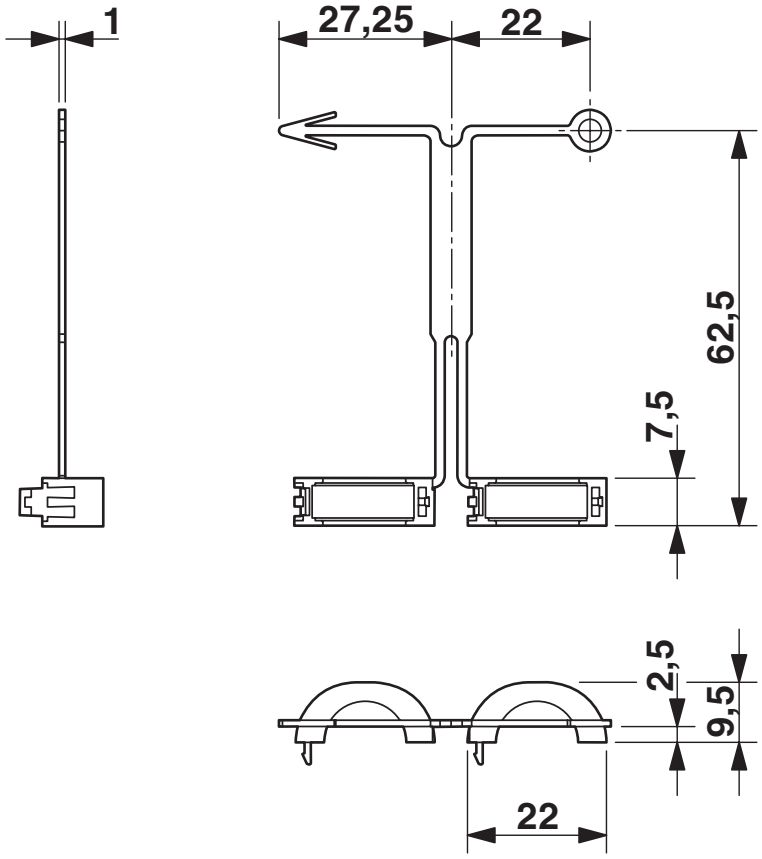

EXCLIP plug

Dimensional drawing

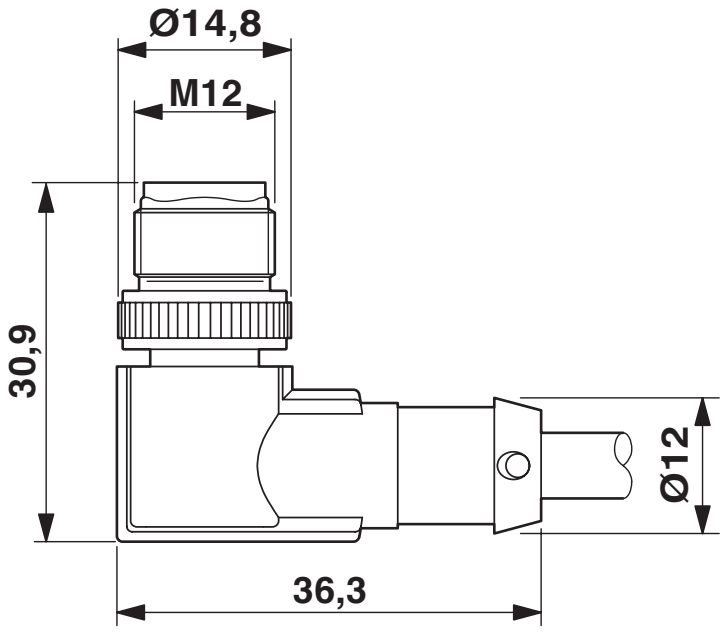

Plug, M12 x 1, angled, shielded

Schematic diagram

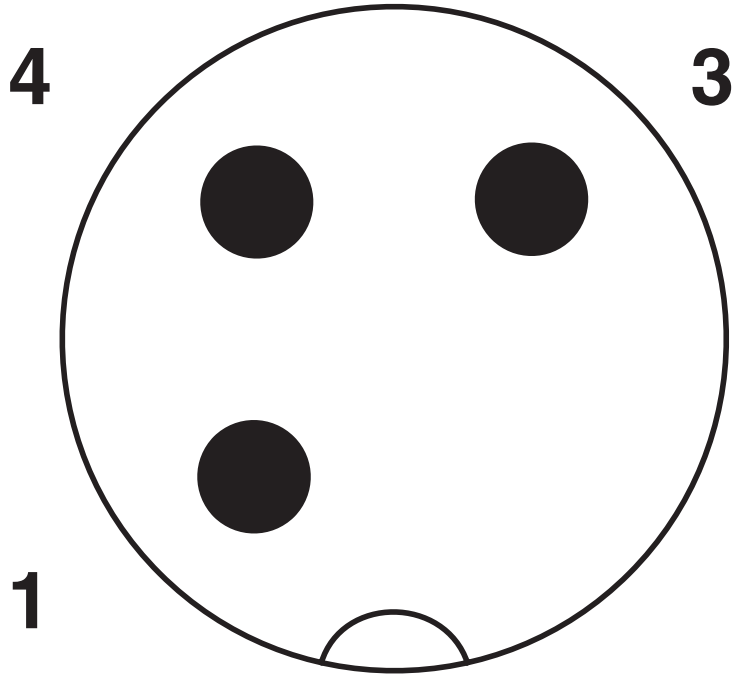

Pin assignment M12 plug, 3-pos., A-coded, view male side

Circuit diagram

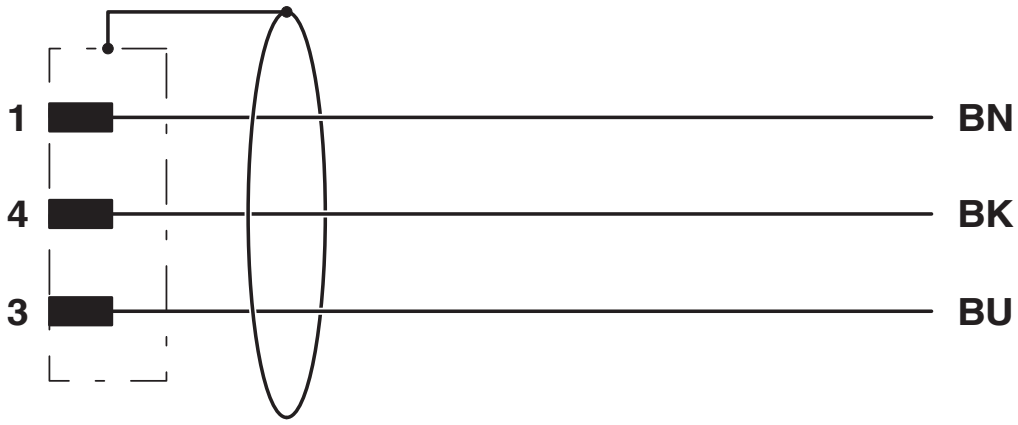

Contact assignment of the M12 plug

Classifications

ECLASS

ECLASS-13.0	27060311
ECLASS-15.0	27060311

ETIM

ETIM 10.0	EC001855

UNSPSC

UNSPSC 21.0	26121600

Environmental product compliance

China RoHS

Environment friendly use period (EFUP)	EFUP-E
	No hazardous substances above the limits

EU REACH SVHC

REACH candidate substance (CAS No.)	No substance above 0.1 wt%

Phoenix Contact 2026 © - all rights reserved
https://www.phoenixcontact.com

Phoenix Contact USA
586 Fulling Mill Road
Middletown, PA 17057, United States
(+717) 944-1300
info@phoenixcon.com