PRC 5-FT25-MC6-150 - Device connector rear mounting

1409213

https://www.phoenixcontact.com/us/products/1409213

Please be informed that the data shown in this PDF document is generated from our online catalog. Please find the complete data in the user documentation. Our general terms of use for downloads are valid.

CRIMP



Device connector rear mounting, Range of articles: PRC 35, color: black, number of positions: 5, max. conductor cross-section: 6 mm^2, rated voltage: 690 V AC, rated current: 35 A, Connection method: Crimp connection, cable length: 150, This item is also available with other cable lengths. For your specific requirements, please contact your local PHOENIX CONTACT subsidiary.

Your advantages

- Up to 75% smaller in size than industrial connectors with the same rating
- Locking mechanism can be unlocked manually or using a tool
- Ideal for indoor and outdoor use due to weatherproof materials
- Either preassembled or designed for assembly

Commercial data

Item number	1409213
Packing unit	10 pc
Minimum order quantity	10 pc
Sales key	AB03
Product key	ABLCAA
GTIN	4046356864329
Weight per piece (including packing)	76.58 g
Weight per piece (excluding packing)	69.771 g
Customs tariff number	85444290
Country of origin	PL

PRC 5-FT25-MC6-150 - Device connector rear mounting

1409213

https://www.phoenixcontact.com/us/products/1409213

Technical data

Notes

Order information:	This item is also available with other cable lengths. For your specific requirements, please contact your local PHOENIX CONTACT subsidiary.
Note on application	For assembly notes, please refer to the packing slip

Product properties

Product type	Panel feed-through
Product family	PRC 35
Number of positions	5
Connection profile	4+PE
Coding	AD

Insulation characteristics

Protection class	II (double or reinforced insulation)
Degree of pollution	2

Connection data

Connection technology

Connection method	Crimp connection

Conductor connection

Tightening torque	2.5 Nm ±0.1 Nm (Tightening torque nut)

Dimensions

Dimensional drawing	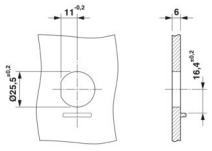
Width	34.5 mm
Height	38.4 mm
Length	179.5 mm
Hole diameter	25.5 mm
Wrench size, union nut	32 mm

Electrical properties

Rated voltage (III/2)	690 V
Rated voltage	690 V AC (III/2) in accordance with IEC 61984
	500 V AC (III/2) in accordance with IEC 61535/2 PfG 1915
	600 V AC / DC (III/2) in accordance with UL 2238 / UL 2237
	500 V DC (III/2) in accordance with IEC 61535

Rated surge voltage (III/2)	8 kV
Rated current	35 A (With 6 mm² conductor cross-section in accordance with IEC 61984)
	32 A (With 6 mm² conductor cross-section in accordance with IEC 61535)
	21.4 A (With 6 mm² conductor cross-section and 85 °C in accordance with 2 PfG 1915)
	28 A (with AWG 10, in accordance with UL 2237)

Mechanical properties

Mechanical data

Insertion/withdrawal cycles	100
Insertion force	40 N ±10 N

Material specifications

Color (Housing)	black (RAL 9005)
Color of the housing part	black
Material Housing	PPE
Material Contact carrier	PPE
Material Screw connection	PPE
Material Contact	CuZn (Contact material, Pb < 0.1)
Material Seal	EPDM
Flammability rating according to UL 94	V0
Contact surface material	Ag
O-ring material	Silicon

Connector

Pull-out-force	175 N ±50 N

Cable/line

Cable length	150 mm
Single wire, material	PVC
Wire diameter incl. insulation	4.8 mm ±0.15 mm
Single wire, cross section	6 mm²
Single wire, color	blue, black, gray, brown, green/yellow
Cable cross section	6 mm²
Halogen-free	no

Mounting

Mounting type	Rear mounting
Thread type	M25 x 1,5 ()

Environmental and real-life conditions

Ambient conditions

Degree of protection (when plugged in)	IP66/IP68 (2 m / 24 h) IP69K

Degree of protection (not plugged in)	IP65 (Lengthwise waterproofing)
Degree of protection	IP66/IP68 (2 m / 24 h) IP69K
Category of shock impact	IK08 (-25°C)
Ambient temperature (operation)	-40 °C ... 105 °C (Depending on the current carrying capacity/derating curve)
Ambient temperature (storage/transport)	-40 °C ... 70 °C
Ambient temperature (assembly)	5 °C ... 85 °C

Standards and regulations

Standards/specifications	IEC 61984:2008
	EN 61984:2008
	DIN EN IEC 61535:2020
	IEC 61535:2019
	2 PfG 1915/03.2015
	UL 2237 Ed.1:2021-01-08
	CSA C22.2 No. 182.3-16 Ed.2:2019-01

Drawings

Dimensional drawing

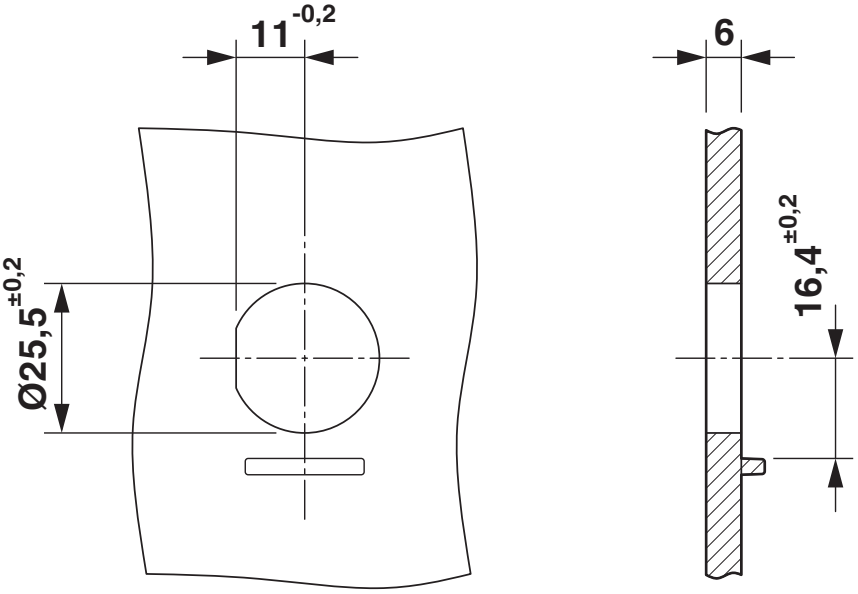

Housing cutout

Dimensional drawing

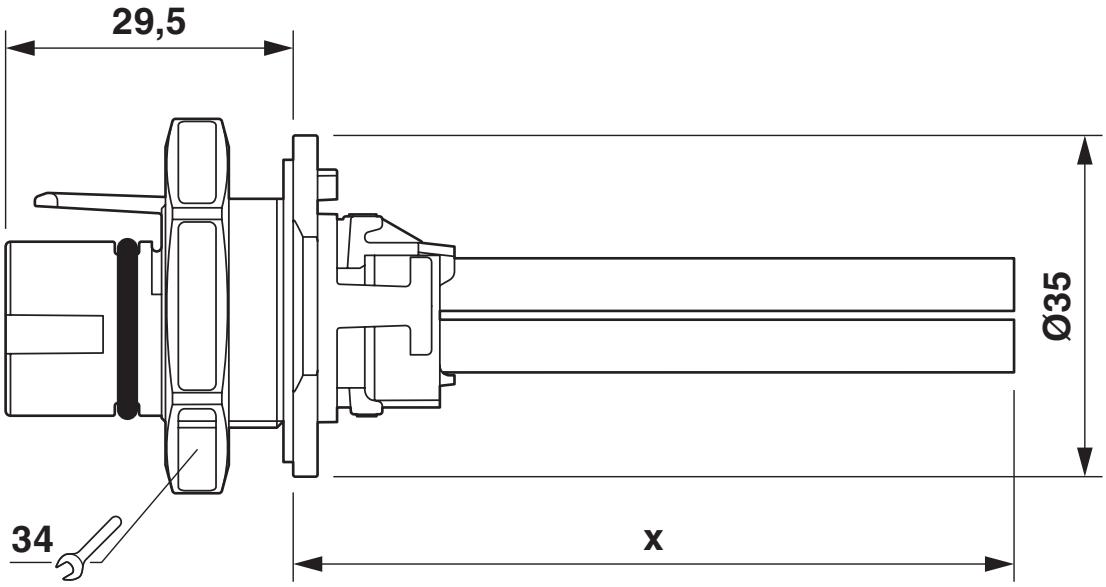

Dimensional drawing

PRC 5-FT25-MC6-150 - Device connector rear mounting

1409213

https://www.phoenixcontact.com/us/products/1409213

Schematic diagram

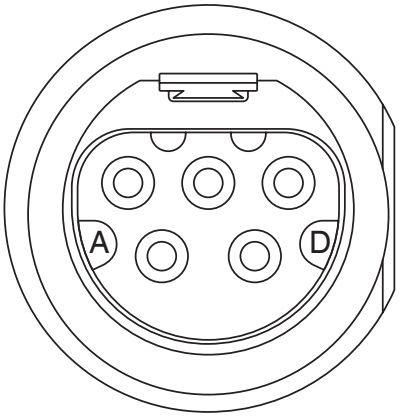

Connector pin assignment

Classifications

ECLASS

ECLASS-13.0	27440602
ECLASS-15.0	27440602

ETIM

ETIM 10.0	EC002566

UNSPSC

UNSPSC 21.0	39121400

Environmental product compliance

EU RoHS

Fulfills EU RoHS substance requirements	Yes, No exemptions

China RoHS

Environment friendly use period (EFUP)	EFUP-E
	No hazardous substances above the limits

EU REACH SVHC

REACH candidate substance (CAS No.)	Triphenyl phosphate(CAS: 115-86-6)
SCIP	f2a5bf4e-1b5d-4532-b361-5643fa9973ba

EF3.1 Climate Change

CO2e kg	0.854 kg CO2e

Phoenix Contact 2026 © - all rights reserved
https://www.phoenixcontact.com

Phoenix Contact USA
586 Fulling Mill Road
Middletown, PA 17057, United States
(+717) 944-1300
info@phoenixcon.com