# NBC-M12MR/ 0,5-94B/R4AC US - Network cable

1408758

https://www.phoenixcontact.com/us/products/1408758

Please be informed that the data shown in this PDF document is generated from our online catalog. Please find the complete data in the user documentation. Our general terms of use for downloads are valid.



Network cable, Ethernet CAT5 (1 Gbps), 8-position, PUR halogen-free, water blue RAL 5021, shielded, Plug angled M12, coding: A / IP67, on Plug straight RJ45 / IP20, cable length: 0.5 m

## Commercial data

| | |
|---|---|
| Item number | 1408758 |
| Packing unit | 1 pc |
| Minimum order quantity | 1 pc |
| Note | Made to order (non-returnable) |
| Sales key | BF15 |
| Product key | AF1IHB |
| GTIN | 4046356827607 |
| Weight per piece (including packing) | 46.4 g |
| Weight per piece (excluding packing) | 44.3 g |
| Customs tariff number | 85444290 |
| Country of origin | US |

## Technical data

### Product properties

| | |
|---|---|
| Product type | Data cable preassembled |
| Application | Standard, U.S. cables |
| Number of positions | 8 |
| Shielded | yes |
| Coding | A |

### Interfaces

| | |
|---|---|
| Bus system | Ethernet |
| Signal type/category | Ethernet CAT5 (based on IEC 11801), 1 Gbps |

### Signaling

| | |
|---|---|
| Status display | no |
| Status display present | no |

### Electrical properties

| | |
|---|---|
| Nominal voltage $U_N$ | 48 V AC |
| | 60 V DC |
| Nominal current $I_N$ | 1 A |
| Transmission medium | Copper |
| Transmission speed | 1 Gbps |
| Transmission characteristics (category) | CAT5 (IEC 11801:2002) |

### Connector

Connection 1

| | |
|---|---|
| Type | Plug angled M12 / IP67 |
| Coding type | A (Standard) |
| Material | CuSn (Contact) |
| | Ni/Au (Contact surface) |
| | PA (Contact carrier) |
| | TPU, hardly inflammable, self-extinguishing (Grip body) |
| | Zinc die-cast, nickel-plated (Screw connection) |
| Degree of protection | IP67 |

Connection 2

| | |
|---|---|
| Type | Plug straight RJ45 / IP20 |
| Material | CuSn (Contact) |
| | Ni/Au (Contact surface) |
| | PA (Contact carrier) |
| | PA (Housing) |
| Degree of protection | IP20 |

## Cable/line

| | |
|---|---|
| Cable length | 0.5 m |

Ethernet flexible CAT5, 4-pair [94B]

| | |
|---|---|
| Dimensional drawing |  |
| UL AWM Style | 21238 (80 °C / 600 V) |
| Number of positions | 8 |
| Shielded | yes |
| Cable type | Ethernet flexible CAT5, 4-pair [94B] |
| Conductor structure | 4x2xAWG26/7, SF/UTP |
| AWG signal line | 26 |
| Conductor cross-section | 4x 2x 0.14 mm² |
| Wire diameter incl. insulation | 0.96 mm ±0.05 mm |
| External cable diameter | 6.40 mm ±0.2 mm |
| Outer sheath, material | PUR |
| External sheath, color | water blue RAL 5021 |
| Conductor material | Bare Cu litz wires |
| Material wire insulation | Foamed PE |
| Single wire, color | white/blue-blue, white/orange-orange, white/green-green, white/brown-brown |
| Twisted pairs | 2 cores to the pair |
| Overall twist | 4 pairs for core |
| Optical shield covering | 70 % |
| Insulation resistance | ≥ 500 MΩ*km |
| Loop resistance | ≤ 290.00 Ω/km |
| Wave impedance | 100 Ω ±5 Ω (at 100 MHz) |
| Nominal voltage, cable | ≤ 100 V |
| Test voltage Core/Core | 2000 V (50 Hz, 1 min.) |
| Test voltage Core/Shield | 2000.00 V (50 Hz, 1 min.) |
| Minimum bending radius, fixed installation | 4 x D |
| Minimum bending radius, flexible installation | 8 x D |
| Smallest bending radius, fixed installation | 26 mm |
| Smallest bending radius, movable installation | 51 mm |
| Halogen-free | according to IEC 60754-1 |
| Flame resistance | according to IEC 60332-1-2 |
| | according to CSA C 22.2 No. 210-FT1 |
| Resistance to oil | in accordance with EN 60811-2-1 |

| | |
|---|---|
| Ambient temperature (operation) | -40 °C ... 80 °C (cable, fixed installation) |
| | -20 °C ... 80 °C (Cable, flexible installation) |

## Environmental and real-life conditions

Ambient conditions

| | |
|---|---|
| Degree of protection | IP65 (M12 connector) |
| | IP67 (M12 connector) |
| | IP20 (RJ45 connector) |
| | IP67/IP20 |
| Ambient temperature (operation) (male connector/female connector) | -25 °C ... 85 °C (M12 connector) |
| | -25 °C ... 60 °C (RJ45 connector) |

## Standards and regulations

M12

| | |
|---|---|
| Standard designation | M12 connector |
| Standards/specifications | IEC 61076-2-101 |

## Drawings

Dimensional drawing

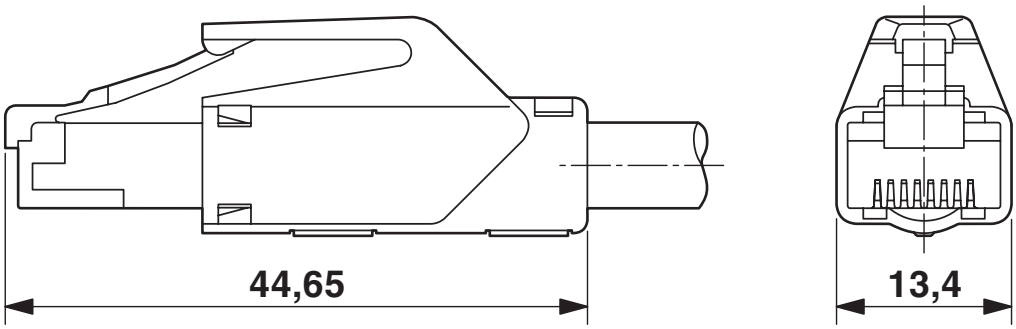


RJ45 connector, IP20

Schematic diagram

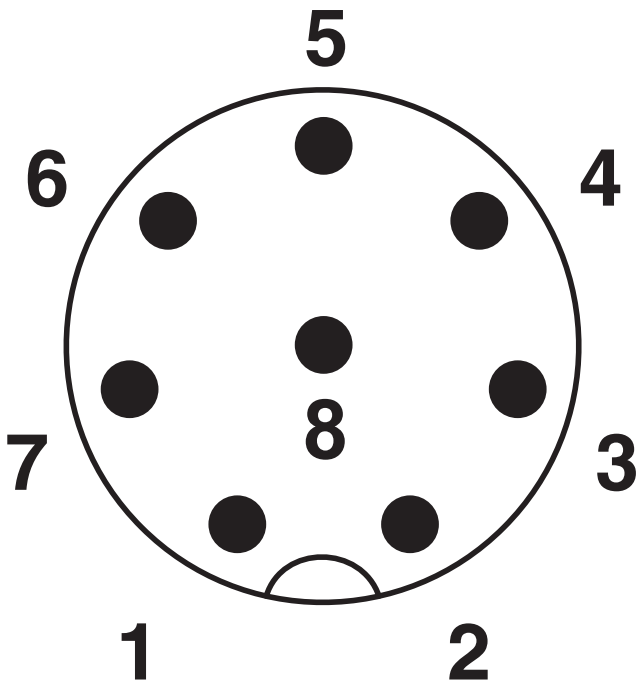


Pin assignment M12 plug, 8-pos., A-coded, view plug side

Schematic diagram

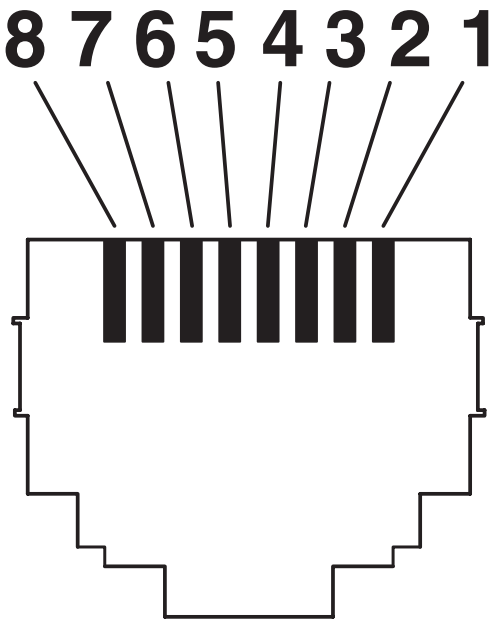


Connector pin assignment plug RJ45

Circuit diagram

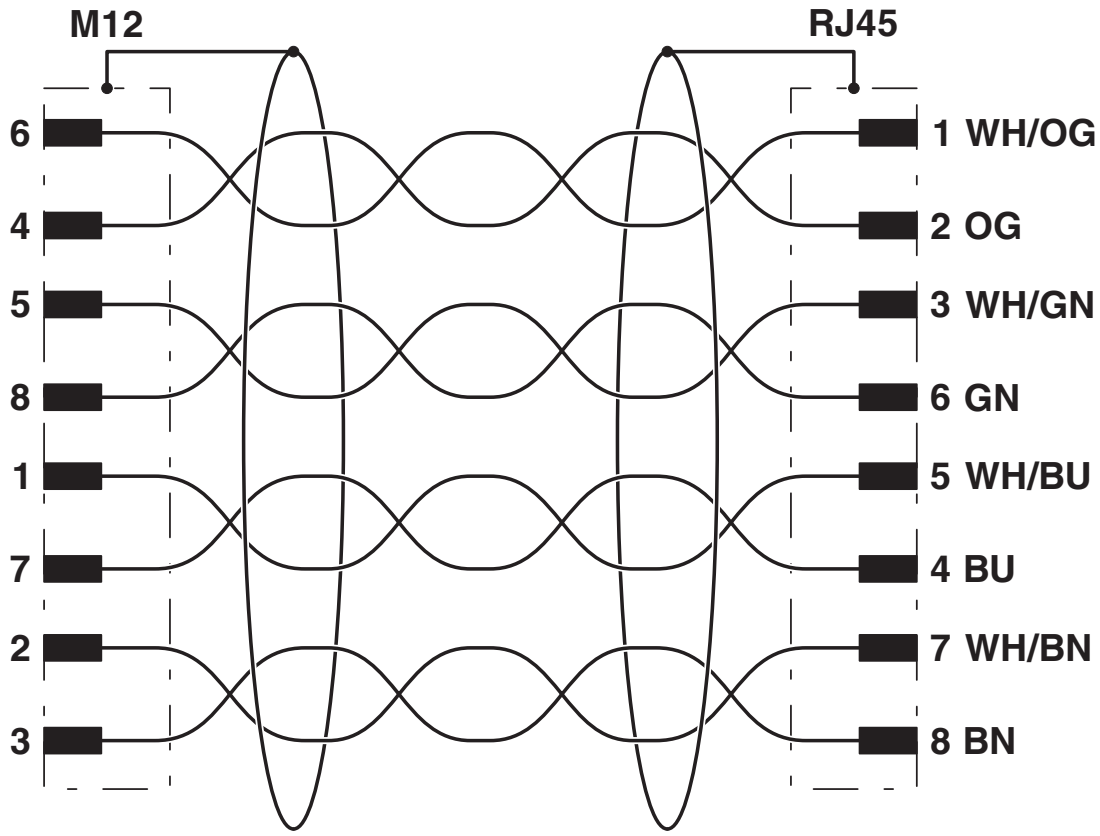


Contact assignment of the M12 and RJ45 plug

## Approvals

To download certificates, visit the product detail page: https://www.phoenixcontact.com/us/products/1408758

**EAC-RoHS**
Approval ID: RU D-DE.HB35.B.00387

**UL Listed**
Approval ID: FILE E 335024

| | Nominal voltage $U_N$ | Nominal current $I_N$ | Cross section AWG | Cross section $mm^2$ |
|---|---|---|---|---|
| keine | | | | |
| | 30 V | 0.5 A | - | - |

## Classifications

### ECLASS

| | |
|---|---|
| ECLASS-13.0 | 27060307 |
| ECLASS-15.0 | 27060307 |

### ETIM

| | |
|---|---|
| ETIM 10.0 | EC002599 |

### UNSPSC

| | |
|---|---|
| UNSPSC 21.0 | 26121600 |

## Environmental product compliance

EU RoHS

| | |
|---|---|
| Fulfills EU RoHS substance requirements | Yes, No exemptions |

China RoHS

| | |
|---|---|
| Environment friendly use period (EFUP) | EFUP-E |
| | No hazardous substances above the limits |

EU REACH SVHC

| | |
|---|---|
| REACH candidate substance (CAS No.) | No substance above 0.1 wt% |


Phoenix Contact 2026 © - all rights reserved
https://www.phoenixcontact.com



Phoenix Contact USA
586 Fulling Mill Road
Middletown, PA 17057, United States
(+717) 944-1300
info@phoenixcon.com