NBC-M12MR/ 5,0-94B US - Network cable

1408751

https://www.phoenixcontact.com/us/products/1408751

Please be informed that the data shown in this PDF document is generated from our online catalog. Please find the complete data in the user documentation. Our general terms of use for downloads are valid.



Network cable, Ethernet CAT5 (1 Gbps), 8-position, PUR halogen-free, water blue RAL 5021, shielded, Plug angled M12, coding: A / IP67, on free cable end, cable length: 5 m

Commercial data

Item number	1408751
Packing unit	1 pc
Minimum order quantity	1 pc
Sales key	BF15
Product key	AF1IHB
GTIN	4046356827669
Weight per piece (including packing)	260.7 g
Weight per piece (excluding packing)	250 g
Customs tariff number	85444290
Country of origin	US

Technical data

Product properties

Product type	Data cable preassembled
Application	Standard, U.S. cables
Number of positions	8
Shielded	yes
Coding	A

Interfaces

Bus system	Ethernet
Signal type/category	Ethernet CAT5 (based on IEC 11801), 1 Gbps

Signaling

Status display	no
Status display present	no

Electrical properties

Nominal voltage U_N	48 V AC
	60 V DC
Nominal current I_N	2 A
Transmission medium	Copper
Transmission speed	1 Gbps
Transmission characteristics (category)	CAT5 (IEC 11801:2002)

Connector

Connection 1

Type	Plug angled M12 / IP67
Coding type	A (Standard)
Material	CuZn (Contact)
	Ni/Au (Contact surface)
	TPU GF (Contact carrier)
	TPU, hardly inflammable, self-extinguishing (Grip body)
	Zinc die-cast, nickel-plated (Screw connection)
Degree of protection	IP67

Connection 2

Type	free cable end

Cable/line

Cable length	5 m

Ethernet flexible CAT5, 4-pair [94B]

Dimensional drawing	
UL AWM Style	21238 (80 °C / 600 V)
Number of positions	8
Shielded	yes
Cable type	Ethernet flexible CAT5, 4-pair [94B]
Conductor structure	4x2xAWG26/7, SF/UTP
AWG signal line	26
Conductor cross-section	4x 2x 0.14 mm²
Wire diameter incl. insulation	0.96 mm ±0.05 mm
External cable diameter	6.40 mm ±0.2 mm
Outer sheath, material	PUR
External sheath, color	water blue RAL 5021
Conductor material	Bare Cu litz wires
Material wire insulation	Foamed PE
Single wire, color	white/blue-blue, white/orange-orange, white/green-green, white/brown-brown
Twisted pairs	2 cores to the pair
Overall twist	4 pairs for core
Optical shield covering	70 %
Insulation resistance	≥ 500 MΩ*km
Loop resistance	≤ 290.00 Ω/km
Wave impedance	100 Ω ±5 Ω (at 100 MHz)
Nominal voltage, cable	≤ 100 V
Test voltage Core/Core	2000 V (50 Hz, 1 min.)
Test voltage Core/Shield	2000.00 V (50 Hz, 1 min.)
Minimum bending radius, fixed installation	4 x D
Minimum bending radius, flexible installation	8 x D
Smallest bending radius, fixed installation	26 mm
Smallest bending radius, movable installation	51 mm
Halogen-free	according to IEC 60754-1
Flame resistance	according to IEC 60332-1-2
	according to CSA C 22.2 No. 210-FT1
Resistance to oil	in accordance with EN 60811-2-1
Ambient temperature (operation)	-40 °C ... 80 °C (cable, fixed installation)
	-20 °C ... 80 °C (Cable, flexible installation)

Environmental and real-life conditions

Ambient conditions

Degree of protection	IP65
	IP67
	IP65/IP67
Ambient temperature (operation) (male connector/female connector)	-25 °C ... 85 °C (M12 connector)

Standards and regulations

M12

Standard designation	M12 connector
Standards/specifications	IEC 61076-2-101

Drawings

Dimensional drawing

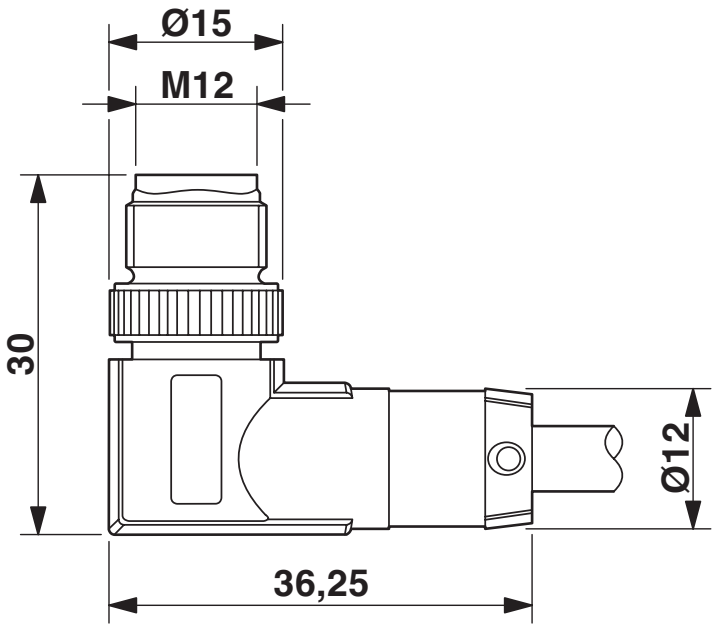

M12 x 1 male plug, angled, shielded

Schematic diagram

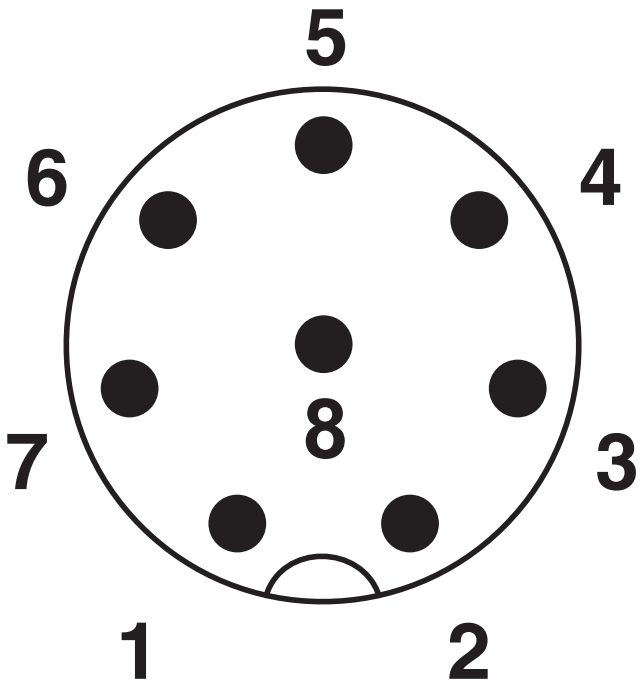

Pin assignment M12 plug, 8-pos., A-coded, view plug side

Circuit diagram

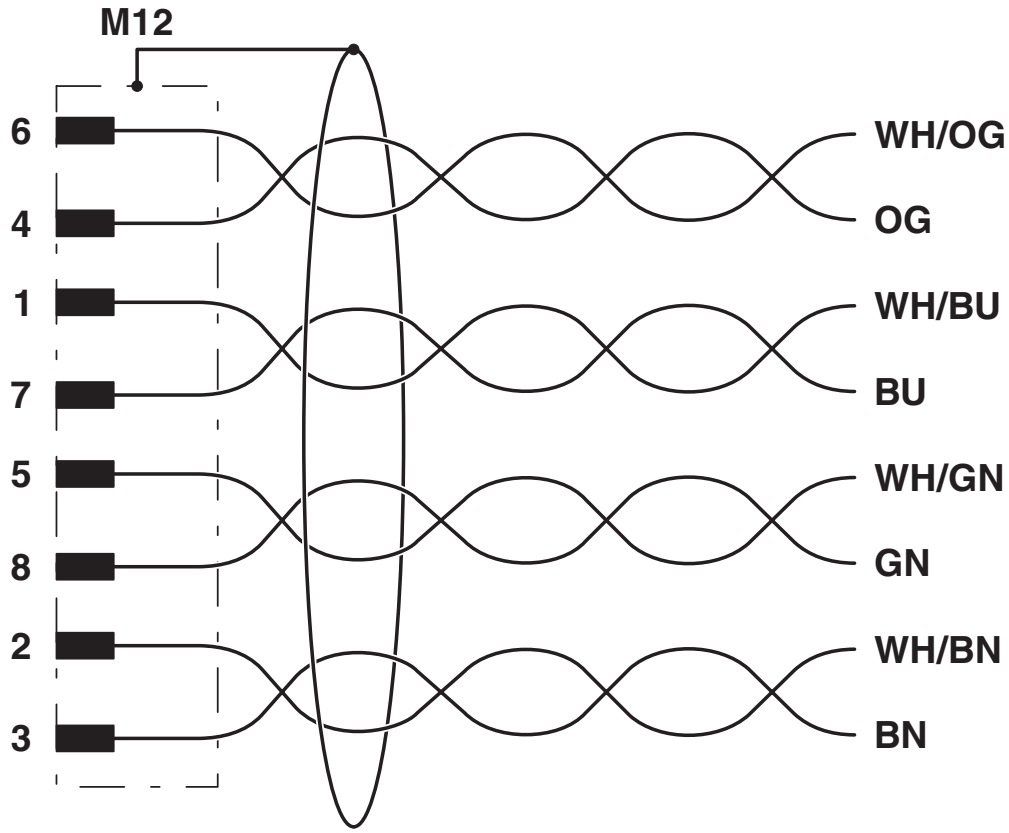

Contact assignment of the M12 plug

Approvals

To download certificates, visit the product detail page: https://www.phoenixcontact.com/us/products/1408751

EAC-RoHS
Approval ID: RU D-DE.HB35.B.00387

UL Recognized
Approval ID: FILE E 335024

	Nominal voltage U_N	Nominal current I_N	Cross section AWG	Cross section mm^2
keine				
	30 V	1.5 A	-	-

Classifications

ECLASS

ECLASS-13.0	27060307
ECLASS-15.0	27060307

ETIM

ETIM 10.0	EC002599

UNSPSC

UNSPSC 21.0	26121600

Environmental product compliance

EU RoHS

Fulfills EU RoHS substance requirements	Yes, No exemptions

China RoHS

Environment friendly use period (EFUP)	EFUP-E
	No hazardous substances above the limits

EU REACH SVHC

REACH candidate substance (CAS No.)	No substance above 0.1 wt%

Phoenix Contact 2026 © - all rights reserved
https://www.phoenixcontact.com

Phoenix Contact USA
586 Fulling Mill Road
Middletown, PA 17057, United States
(+717) 944-1300
info@phoenixcon.com