# HC-B16-I-PT-F - Contact insert

1407731

https://www.phoenixcontact.com/us/products/1407731

Please be informed that the data shown in this PDF document is generated from our online catalog. Please find the complete data in the user documentation. Our general terms of use for downloads are valid.



Contact insert, number of positions: 16+PE, size: B16, number of connections per position: 1, Socket, Push-in connection, 500 V, 16 A, 0.14 $mm^2$ ... 2.5 $mm^2$, application: Power

## Your advantages

- Easy installation without tools, even when mounted, with push-in connection technology
- Shortest installation time compared to other connection technologies
- Quick and effortless wiring, in particular when space is tight
- Automatic cabling with robots possible
- Safe wiring and operation with color-coded actuators
- Shock and vibration-resistant in accordance with DIN EN 61373
- Cost-effective and fast coding with plastic profiles
- Test pick-off for 2 mm test plug

## Commercial data

| | |
|---|---|
| Item number | 1407731 |
| Packing unit | 1 pc |
| Minimum order quantity | 1 pc |
| Sales key | BF61 |
| Product key | AF7ABC |
| GTIN | 4046356777568 |
| Weight per piece (including packing) | 85.5 g |
| Weight per piece (excluding packing) | 85 g |
| Customs tariff number | 85366990 |
| Country of origin | CN |

## Technical data

### Notes

| | |
|---|---|
| General | only use flexible conductors with ferrules |
| General | Connectors may be operated only when there is no load/voltage. |

### Mounting

| | |
|---|---|
| Assembly note | To ensure correct use, installation in housing with IP54 protection or better is required |

### Product properties

| | |
|---|---|
| Product type | Contact insert with a fixed no. of positions |
| Series | HC-B |
| Application | Power |
| Type | B16 |
| | B32 |
| Number of positions | 16 |
| Connection profile | 16+PE |
| Contact numbering | 1 - 16 |
| Number of connections per position | 1 |
| Contact material type | rolled |

Insulation characteristics

| | |
|---|---|
| Overvoltage category | III |
| Degree of pollution | 3 |

### Dimensions

| | |
|---|---|
| Dimensional drawing | 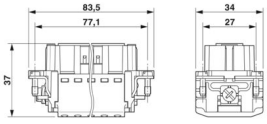  |
| Width | 34 mm |
| Height | 37 mm |
| Length | 84 mm |
| Drill hole distance, horizontal | 77.5 mm |
| Drill hole distance, vertical | 27 mm |

Mechanical characteristics

| | |
|---|---|
| Contact diameter | 2.5 mm |

### Connection data

Connection technology

| | |
|---|---|
| Connection technology | Push-in connection |
| Number of connections per position | 1 |

Conductor connection

| | |
|---|---|
| Conductor cross-section | 0.14 mm² ... 2.5 mm² |
| Connection cross section AWG | 26 ... 12 (AWG 12 only without ferrule and with 0.8 Nm tightening torque) |
| Tightening torque | 0.8 Nm ... 1.2 Nm (PE connection) |
| | 0.5 Nm ... 0.8 Nm (Mounting screws for mounting in the HEAVYCON housing) |
| Stripping length | 8 mm ... 10 mm |

## Electrical properties

| | |
|---|---|
| Rated voltage (III/3) | 500 V |
| Rated surge voltage | 6 kV |
| Rated current | 16 A (power contacts) |
| SCCR | 5 kA (UL 2237) |

## Mechanical properties

Mechanical data

| | |
|---|---|
| Insertion/withdrawal cycles | ≥ 500 |

## Material specifications

| | |
|---|---|
| Flammability rating according to UL 94 | V0 |
| Contact material | Copper alloy |
| Contact surface material | Ag/Sn (tarnish protection) |
| Contact carrier material | PC |

## Environmental and real-life conditions

Ambient conditions

| | |
|---|---|
| Ambient temperature (operation) | -40 °C ... 125 °C (including heating up of contacts) |

## Standards and regulations

| | |
|---|---|
| Standards/regulations | PC: Fire protection in rail vehicles - requirement sets R22, R23, and R24 acc. to DIN EN 45545-2 (Risk level HL1 - HL3) |

## Drawings

Dimensional drawing

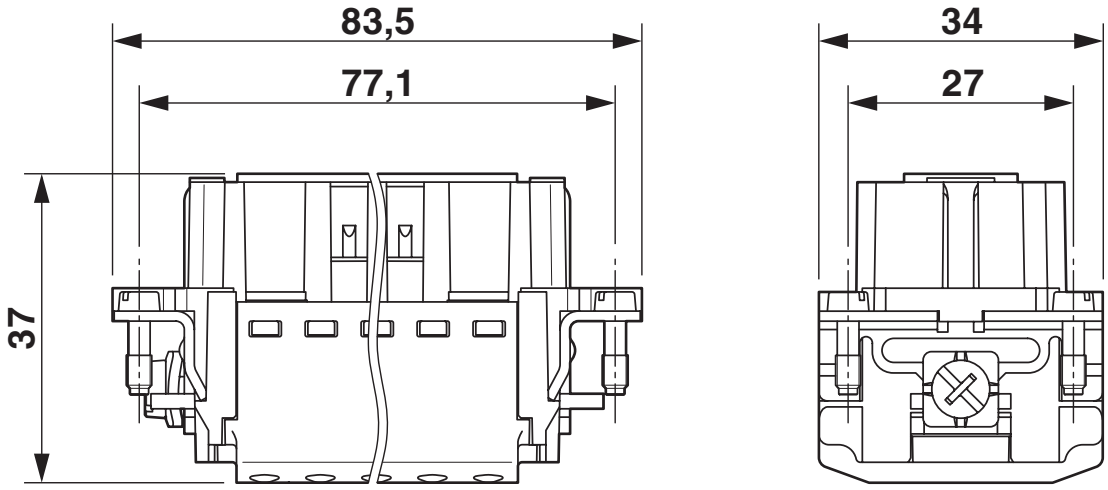


Dimensional drawing

Dimensional drawing

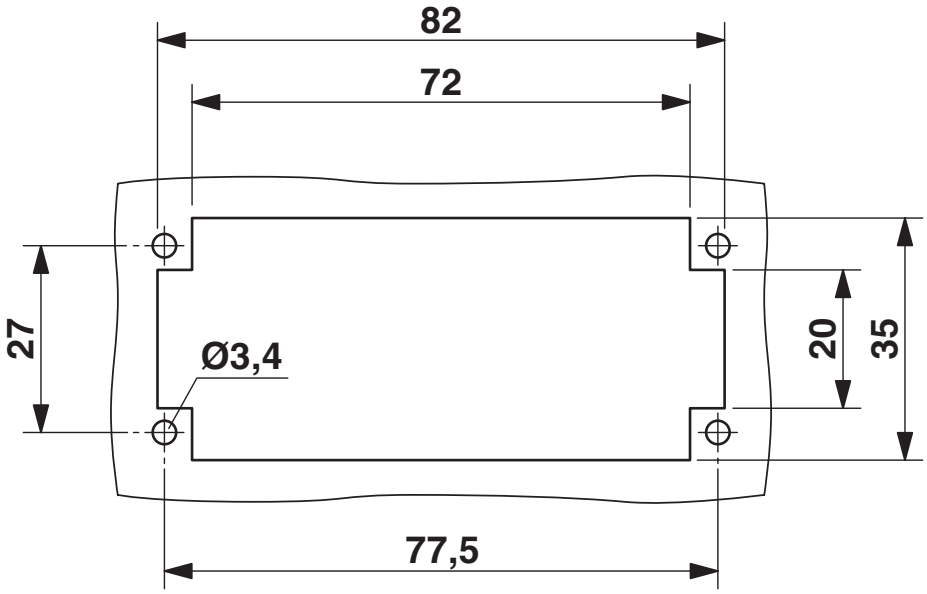


Mounting cutout when used without housing

Schematic diagram

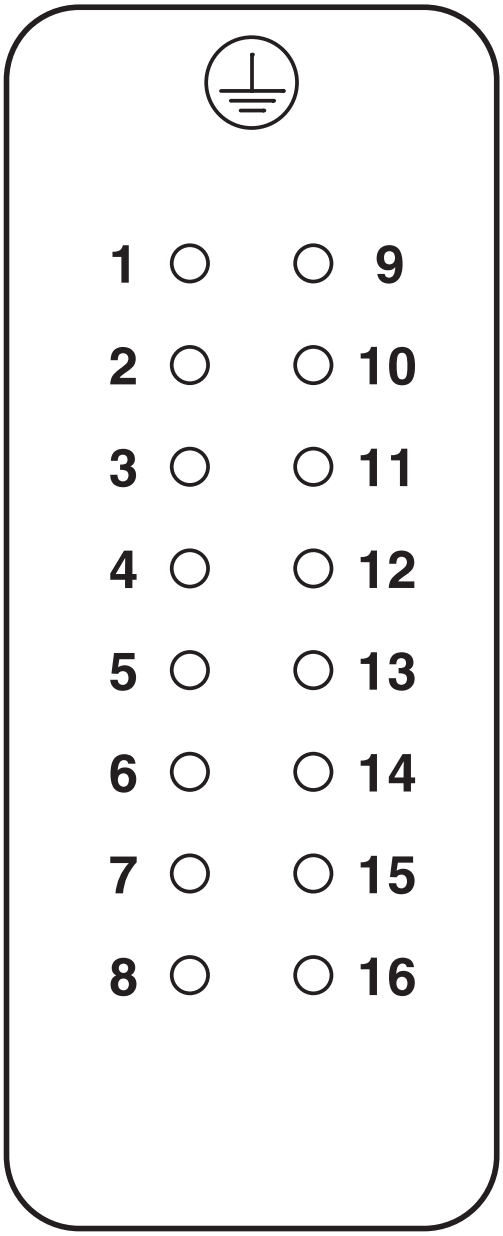


Connector pin assignment, connection side

Diagram

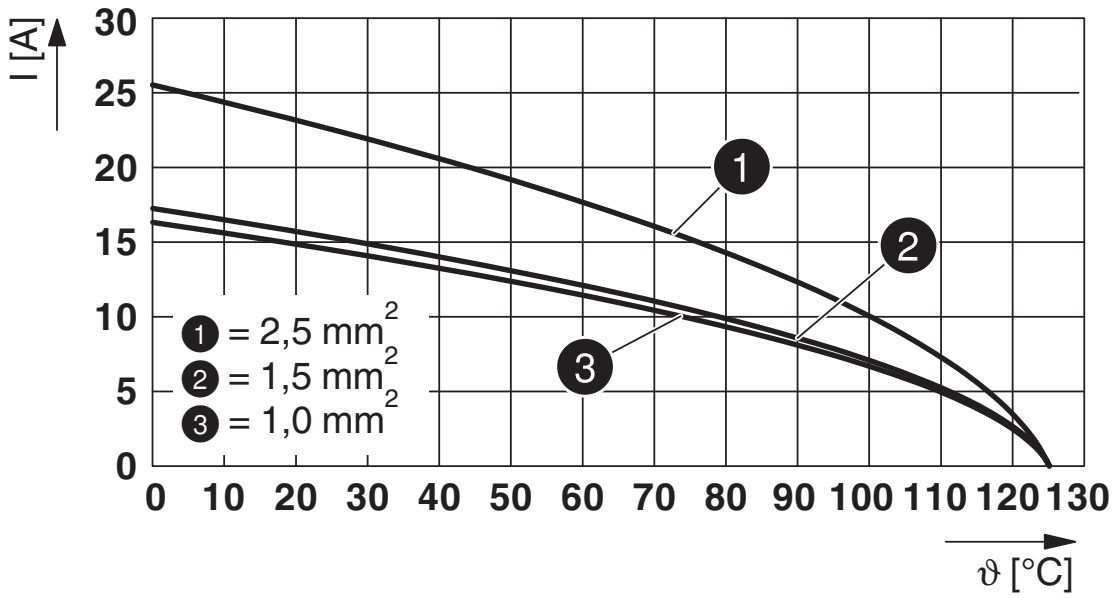


Derating diagram

## Approvals

To download certificates, visit the product detail page: https://www.phoenixcontact.com/us/products/1407731

**DNV**
Approval ID: TAE000037S

**CSA**
Approval ID: 13631

| | Nominal voltage $U_N$ | Nominal current $I_N$ | Cross section AWG | Cross section $mm^2$ |
|---|---|---|---|---|
| keine | | | | |
| | 600 V | 10 A | - 14 | - |

**UL Recognized**
Approval ID: E118976

| | Nominal voltage $U_N$ | Nominal current $I_N$ | Cross section AWG | Cross section $mm^2$ |
|---|---|---|---|---|
| keine | | | | |
| | 600 V | 13 A | - 14 | - |

**cULus Recognized**
Approval ID: E468743

| | Nominal voltage $U_N$ | Nominal current $I_N$ | Cross section AWG | Cross section $mm^2$ |
|---|---|---|---|---|
| keine | | | | |
| | 600 V | 13 A | 14 - 12 | - |

## Classifications

### ECLASS

| | |
|---|---|
| ECLASS-13.0 | 27440205 |
| ECLASS-15.0 | 27440205 |

### ETIM

| | |
|---|---|
| ETIM 10.0 | EC000438 |

### UNSPSC

| | |
|---|---|
| UNSPSC 21.0 | 39121500 |

## Environmental product compliance

EU RoHS

| | |
|---|---|
| Fulfills EU RoHS substance requirements | Yes, No exemptions |

China RoHS

| | |
|---|---|
| Environment friendly use period (EFUP) | EFUP-E |
| | No hazardous substances above the limits |

EU REACH SVHC

| | |
|---|---|
| REACH candidate substance (CAS No.) | No substance above 0.1 wt% |


Phoenix Contact 2026 © - all rights reserved
https://www.phoenixcontact.com



Phoenix Contact USA
586 Fulling Mill Road
Middletown, PA 17057, United States
(+717) 944-1300
info@phoenixcon.com