HC-B10-BC-HI-PLBK - Protective cover

1407693

https://www.phoenixcontact.com/us/products/1407693

Please be informed that the data shown in this PDF document is generated from our online catalog. Please find the complete data in the user documentation. Our general terms of use for downloads are valid.



Protective cover B10, for single locking latch, protective cover material: PC, height: 19.1 mm, seal: no

Commercial data

Item number	1407693
Packing unit	1 pc
Minimum order quantity	1 pc
Sales key	BF66
Product key	AF7AZC
GTIN	4046356776783
Weight per piece (including packing)	35.3 g
Weight per piece (excluding packing)	30.46 g
Customs tariff number	85389099
Country of origin	PL

Technical data

Product properties

Product type	Protective cover
Housing type	Protective cover
Type	B10
Retaining cord present	no
Seal present	no

Dimensions

Dimensional drawing	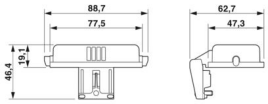
Width	47.3 mm
Height	19.1 mm
Length	77.5 mm

Material specifications

Material Protective cover	PC
Flammability rating according to UL 94	V0
Material, protective cover	PC

Environmental and real-life conditions

Ambient conditions

Degree of protection	IP65
	IP66
Ambient temperature (operation)	-20 °C ... 100 °C

Drawings

Dimensional drawing

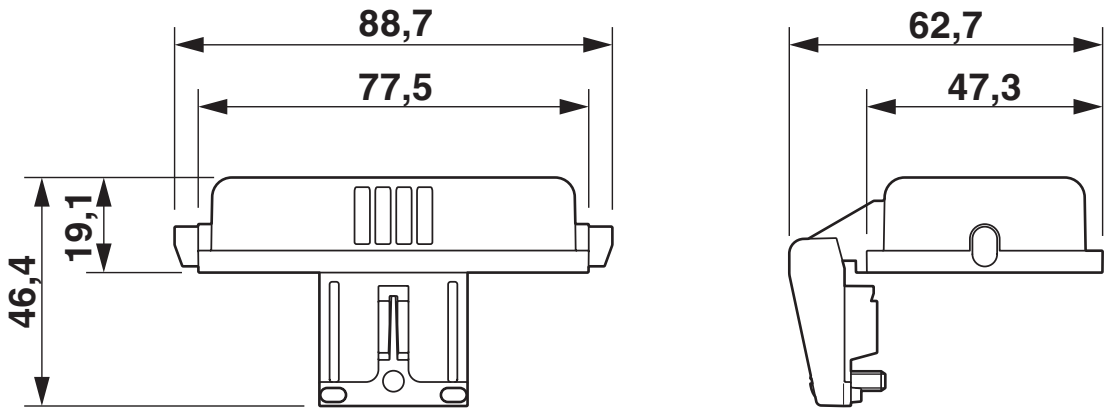

Dimensional drawing

Approvals

To download certificates, visit the product detail page: https://www.phoenixcontact.com/us/products/1407693

EAC
Approval ID: RU C-DE.AI30.B.01102

Classifications

ECLASS

ECLASS-13.0	27440208
ECLASS-15.0	27440208

ETIM

ETIM 10.0	EC002314

UNSPSC

UNSPSC 21.0	39121400

Environmental product compliance

EU RoHS

Fulfills EU RoHS substance requirements	Yes, No exemptions

China RoHS

Environment friendly use period (EFUP)	EFUP-E
	No hazardous substances above the limits

EU REACH SVHC

REACH candidate substance (CAS No.)	No substance above 0.1 wt%

Phoenix Contact 2026 © - all rights reserved
https://www.phoenixcontact.com

Phoenix Contact USA
586 Fulling Mill Road
Middletown, PA 17057, United States
(+717) 944-1300
info@phoenixcon.com