HC-EVO-B06-CHWS-PLRBK - Housing

1407625

https://www.phoenixcontact.com/us/products/1407625

Please be informed that the data shown in this PDF document is generated from our online catalog. Please find the complete data in the user documentation. Our general terms of use for downloads are valid.



Coupling housings B6, with single locking latch, material: PA 6.6-FR, cable outlets: 1, straight/lateral, height: 90 mm, cable gland: none, Standard

Your advantages

- Flexible cable outlet direction, lateral or straight
- Lower costs than metal version
- Low weight
- Lower risk of condensation

Commercial data

Item number	1407625
Packing unit	1 pc
Minimum order quantity	1 pc
Sales key	BF57
Product key	AF7APL
GTIN	4046356776875
Weight per piece (including packing)	94 g
Weight per piece (excluding packing)	95.09 g
Customs tariff number	85389099
Country of origin	PL

Technical data

Notes

Notes on the product family	For contact inserts HC-B6, BB10, DD24, M
Note on application	compatible with module carrier frames with click-in function

Product properties

Product type	Housing with locking latch
Housing type	Coupling housings
Product family	HC-EVO-B
Application	Standard
Type	B6
No. of cable outlets	1
Cable outlet	straight
Pg screw connection	none

Dimensions

Dimensional drawing	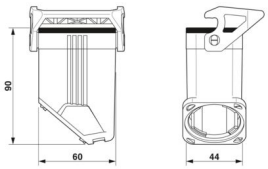
Width	44 mm
Height	90 mm
Length	60 mm

Material specifications

Flammability rating according to UL 94	V0 (Housing)
	V0 (Interlock)
Seal material	NBR (profile gasket)
Housing material	PA 6.6-FR
Locking latch material	PA

Mechanical properties

Mechanical data

Locking type	Latch

Mounting

Assembly note	The coupling housing must be supplemented with the EVO screw connection. The EVO screw connection is available in four sizes. The EVO screw connection is mounted with the aid of a pipe wrench, for example.

Environmental and real-life conditions

Ambient conditions

Degree of protection	IP66
Enclosure rating (NEMA)	12 (UL 50e)
Impact strength	IK08
Ambient temperature (operation)	-40 °C ... 125 °C

Drawings

Dimensional drawing

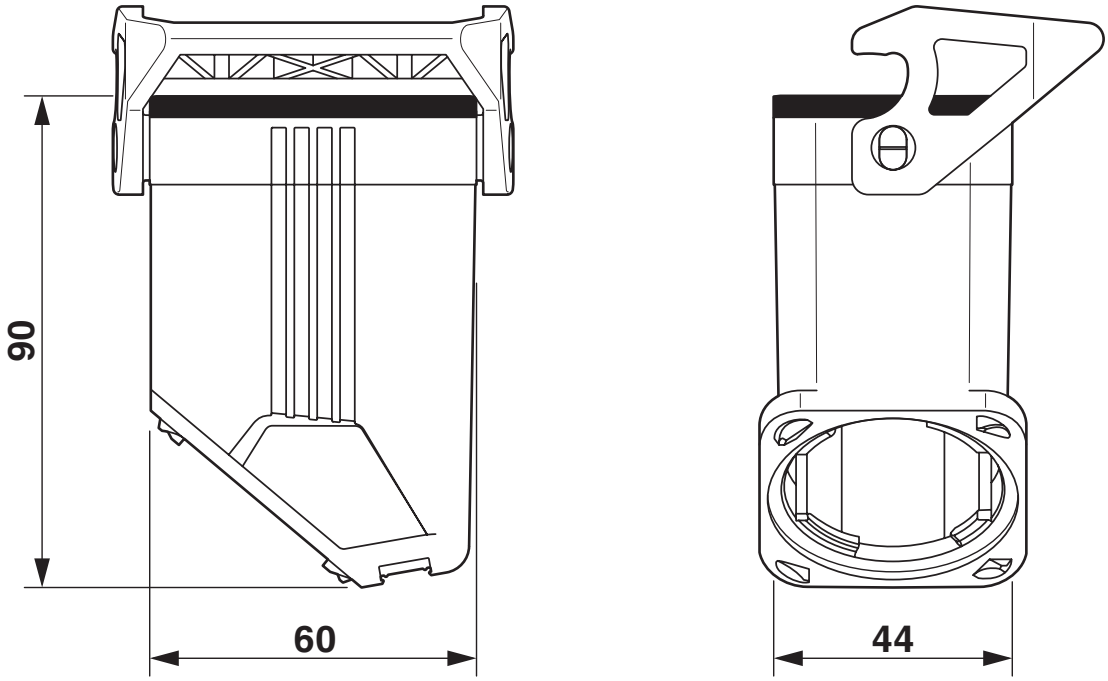

Dimensional drawing

Approvals

To download certificates, visit the product detail page: https://www.phoenixcontact.com/us/products/1407625

DNV
Approval ID: TAE000037S

cUL Recognized
Approval ID: E255026

UL Recognized
Approval ID: E255026

EAC
Approval ID: RU C-DE.AI30.B.01102

Classifications

ECLASS

ECLASS-13.0	27440202
ECLASS-15.0	27440202

ETIM

ETIM 10.0	EC000437

UNSPSC

UNSPSC 21.0	31261500

Environmental product compliance

EU RoHS

Fulfills EU RoHS substance requirements	Yes, No exemptions

China RoHS

Environment friendly use period (EFUP)	EFUP-E
	No hazardous substances above the limits

EU REACH SVHC

REACH candidate substance (CAS No.)	No substance above 0.1 wt%

Phoenix Contact 2026 © - all rights reserved
https://www.phoenixcontact.com

Phoenix Contact USA
586 Fulling Mill Road
Middletown, PA 17057, United States
(+717) 944-1300
info@phoenixcon.com