SAC-ASI-J-Y-B-PUR-2,0-FR SCO - Distributor

1407578

https://www.phoenixcontact.com/us/products/1407578

Please be informed that the data shown in this PDF document is generated from our online catalog. Please find the complete data in the user documentation. Our general terms of use for downloads are valid.



AS-Interface distributor with a high degree of protection, for a branch from two flat-ribbon conductors to a 2.0 m PUR round cable with angled M12-SPEEDCON socket

Commercial data

Item number	1407578
Packing unit	1 pc
Minimum order quantity	1 pc
Sales key	BF10
Product key	AF1GFA
GTIN	4046356779982
Weight per piece (including packing)	112 g
Weight per piece (excluding packing)	104.9 g
Customs tariff number	85444290
Country of origin	VN

Technical data

Product properties

Product type	Network distributor box
Number of positions	4
Coding	A

Insulation characteristics

Overvoltage category	II
Degree of pollution	3

Electrical properties

Nominal voltage U_N	≤ 32 V DC
Nominal current I_N	4 A
Transmission medium	Copper

Connection data

Connection technology

Connection method	AS-i penetration technique

Connection assignment

Contact | Color (signal designation) | Contact (optional)	1 (M12 socket) | BN (AS-i+) | 3.1 (AS-i distributors)
	2 (M12 socket) | WH (AUX-) | 4.2 (AS-i distributors)
	3 (M12 socket) | BU (AS-i-) | 3.2 (AS-i distributors)
	4 (M12 socket) | BK (AUX+) | 4.1 (AS-i distributors)
	5 (M12 socket) | N.C.

Interfaces

Signal type/category	CANopen®
	DeviceNet™

Signaling

Status display	no
Status display present	no

Connector

Connection 1

Type	Load center lateral AS-i Screw locking
Number of positions	4
Locking type	Screw locking mechanism
Material	CuSn (Contact)
	Ni/Au (Contact surface)
	PBT (Contact carrier)
	PBT (Housing)

	Stainless steel (Screw connection)
Tightening torque	1.65 Nm (Locking screw)

Connection 2

Type	Socket angled M12 SPEEDCON
Number of positions	4 (5)
Locking type	SPEEDCON
Material	CuSn (Contact)
	Ni/Au (Contact surface)
	TPU GF (Contact carrier)
	TPU (Grip body)
	Zinc die-cast, nickel-plated (Screw connection)
Insertion/withdrawal cycles	≥ 100
Tightening torque	0.4 Nm

Cable/line

Cable length	2 m

PUR halogen-free black [PUR]

Dimensional drawing	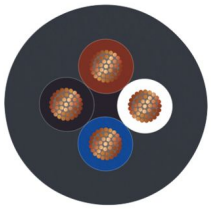
UL AWM Style	20549 / 10493
Number of positions	4
Shielded	no
Cable type	PUR halogen-free black [PUR]
Conductor structure signal line	42x 0.10 mm
AWG signal line	22
Conductor cross-section	4x 0.34 mm² (Signal line)
Wire diameter incl. insulation	1.25 mm ±0.05 mm
External cable diameter	4.30 mm ±0.2 mm
Outer sheath, material	PUR
External sheath, color	black
Conductor material	Bare Cu litz wires
Material wire insulation	PP
Single wire, color	brown, white, blue, black
Overall twist	4 wires, twisted
Ambient temperature (operation)	-40 °C ... 80 °C (fixed routing)
	-25 °C ... 80 °C (Flexibly installed)

Environmental and real-life conditions

Ambient conditions

Degree of protection	IP65
	IP67
Ambient temperature (operation)	-25 °C ... 75 °C
Ambient temperature (operation) (Cable, flexible installation)	-25 °C ... 80 °C (Cable, flexible installation)
Ambient temperature (operation) (Cable, fixed installation)	-40 °C ... 80 °C (cable, fixed installation)
Ambient temperature (storage/transport)	-25 °C ... 85 °C

Standards and regulations

Standard designation	M12 connector
Standards/specifications	IEC 61076-2-101

Drawings

Dimensional drawing

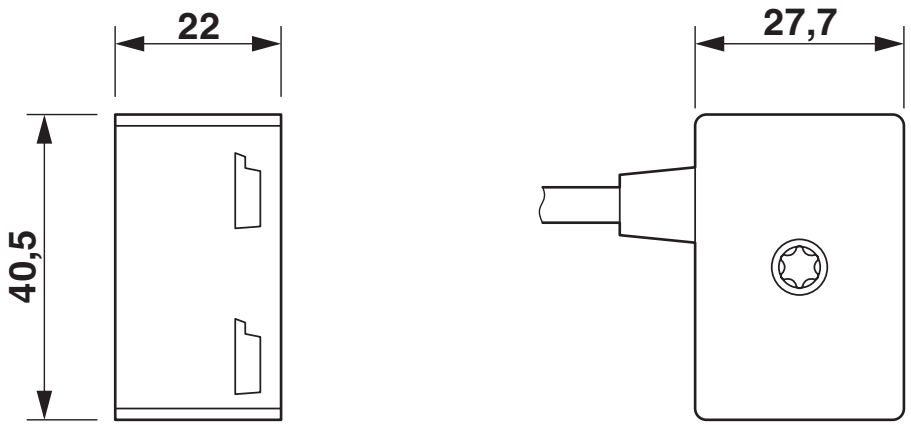

Distributor, AS-Interface

Dimensional drawing

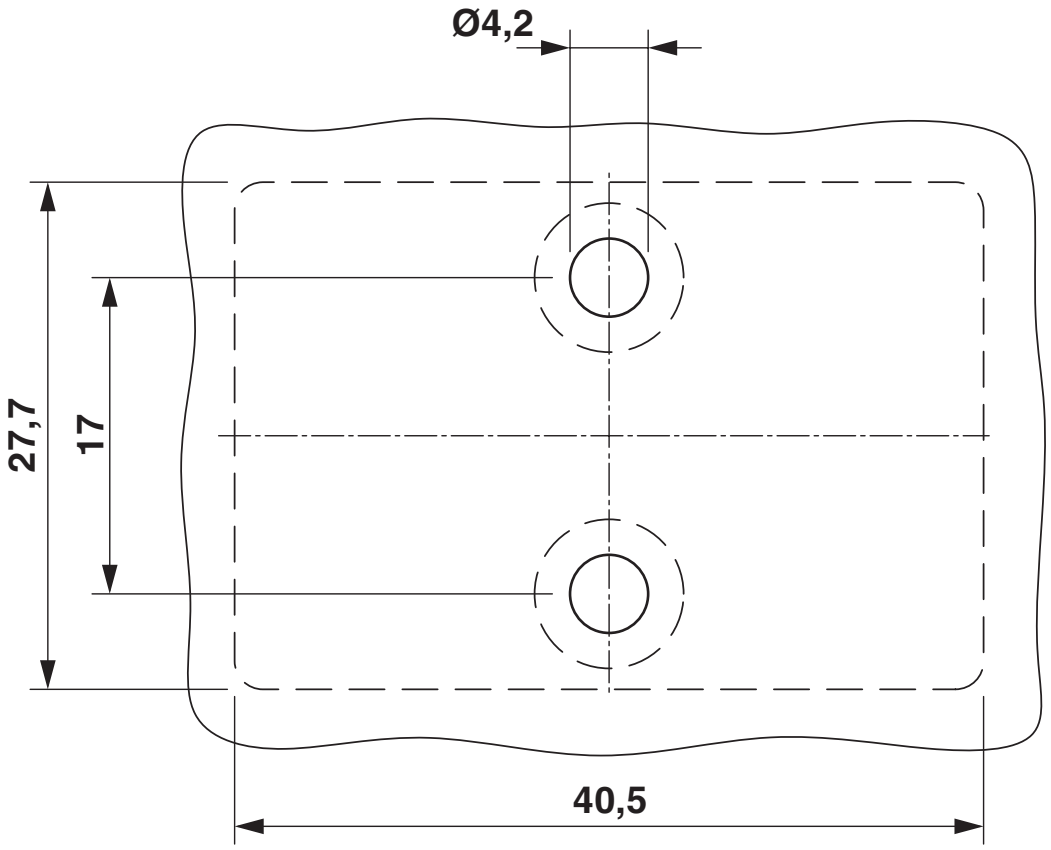

Distance and position of the mounting holes

Dimensional drawing

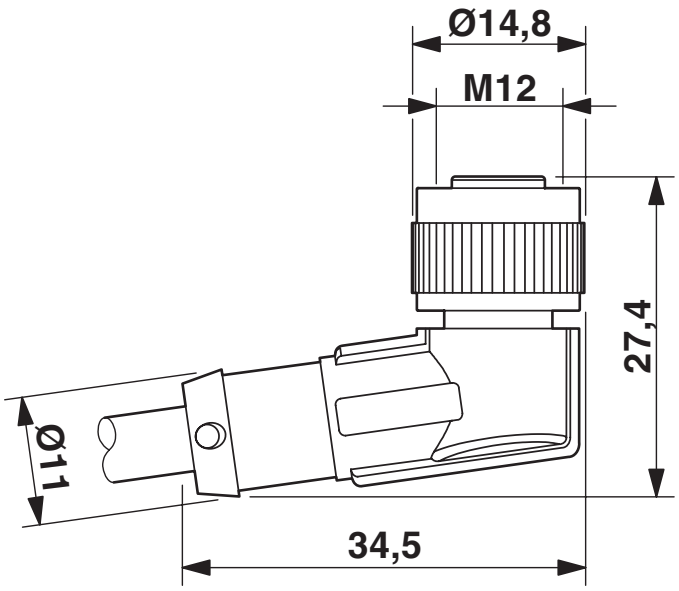

M12 x 1 socket, angled

Schematic diagram

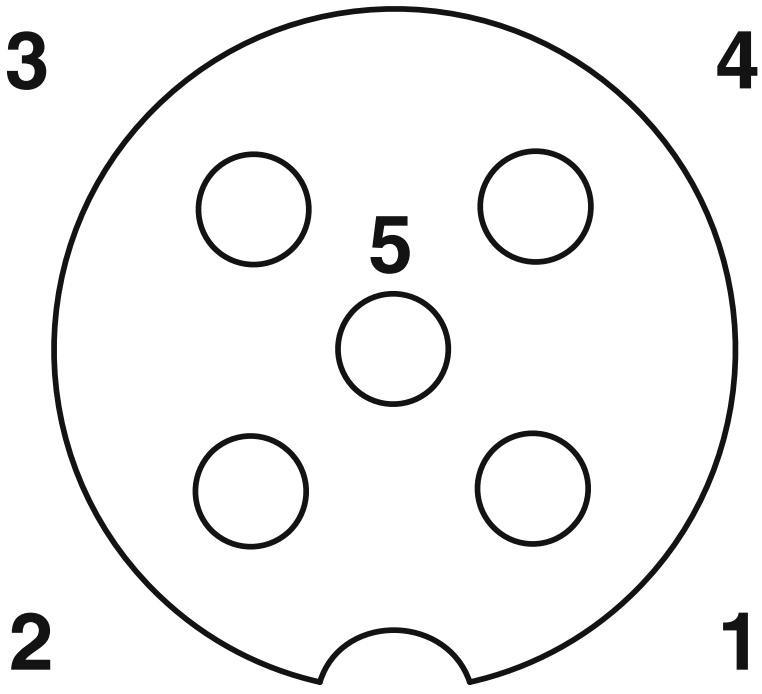

Pin assignment M12, PIN 1: AS-i +, PIN 2: AUX -, PIN 3: AS-i -, PIN 4: AUX +, PIN 5: Not used

Circuit diagram

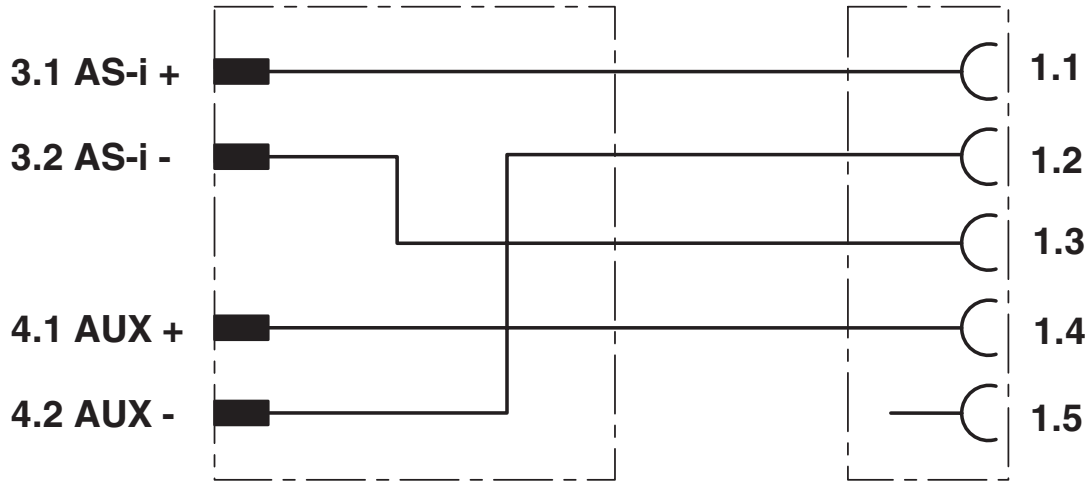

Contact assignment of the AS-Interface distributor

Classifications

ECLASS

ECLASS-13.0	27440106
ECLASS-15.0	27440106

ETIM

ETIM 10.0	EC002925

UNSPSC

UNSPSC 21.0	31251500

Environmental product compliance

EU RoHS

Fulfills EU RoHS substance requirements	Yes, No exemptions

China RoHS

Environment friendly use period (EFUP)	EFUP-50
	An article-related China RoHS declaration table can be found in the download area for the respective article under "Manufacturer declaration". For all articles with EFUP-E, no China RoHS declaration table issued and required.

EU REACH SVHC

REACH candidate substance (CAS No.)	No substance above 0.1 wt%

EF3.1 Climate Change

CO2e kg	6.52 kg CO2e

Phoenix Contact 2026 © - all rights reserved
https://www.phoenixcontact.com

Phoenix Contact USA
586 Fulling Mill Road
Middletown, PA 17057, United States
(+717) 944-1300
info@phoenixcon.com