NBC-M12MSD/ 2,0-93B/R4AC - Network cable

1407500

https://www.phoenixcontact.com/us/products/1407500

Please be informed that the data shown in this PDF document is generated from our online catalog. Please find the complete data in the user documentation. Our general terms of use for downloads are valid.



Network cable, PROFINET CAT5 (100 Mbps), EtherCAT® CAT5 (100 Mbps), 4-position, PVC/PVC, green RAL 6018, shielded (Advanced Shielding Technology), Plug straight M12, coding: D / IP67, on Plug straight RJ45 / IP20, cable length: 2 m

Commercial data

Item number	1407500
Packing unit	1 pc
Minimum order quantity	1 pc
Sales key	BF04
Product key	AF1CJN
GTIN	4046356778107
Weight per piece (including packing)	155.8 g
Weight per piece (excluding packing)	155.8 g
Customs tariff number	85444290
Country of origin	PL

Technical data

Notes

General	This product corresponds to the PROFINET Cabling and Interconnection Technology Guideline for PROFINET regulations, version 2.00, order no: 2.252, Chapter 10.1 Cord Sets for Balanced Cabling
General	Further products with variable cable type and variable cable length can be found in the accessories section

Product properties

Product type	Data cable preassembled
Application	Standard
Number of positions	4
Shielded	yes

Interfaces

Signal type/category	PROFINET CAT5 (IEC 11801), 100 Mbps
	EtherCAT® CAT5 (IEC 11801), 100 Mbps

Electrical properties

Nominal voltage U_N	48 V AC
	60 V DC
Nominal current I_N	1 A
Transmission medium	Copper
Transmission speed	100 Mbps

Connector

Connection 1

Dimensional drawing	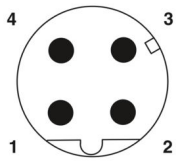 Pin assignment M12 male connector, 4-pos., D-coded, male side
Type	M12 Plug, straight, 4-position, shielded (Advanced Shielding Technology), Keying: D, EtherCAT®, PROFINET
Number of positions	4
Shielded	yes
Shielding	Advanced Shielding Technology
Signal type/category	EtherCAT® CAT5 (IEC 11801), 100 Mbps
	PROFINET CAT5 (IEC 11801)
Insertion/withdrawal cycles	≥ 100
Insulation resistance	≥ 100 MΩ

Overvoltage category	II
Degree of pollution	3
Tightening torque	0.4 Nm
Material Contact	CuSn
Material Contact surface	Ni/Au
Material Contact carrier	PA 6.6
Material Screw connection	Die-cast zinc, nickel-plated
Material Grip body	TPU, hardly inflammable, self-extinguishing
Material Seal	FKM
Flammability rating according to UL 94	V0
Degree of protection	IP65
	IP67
Ambient temperature (operation)	-25 °C ... 85 °C
Standard designation	M12 connector
Standards/regulations	IEC 61076-2-101

Connection 2

Dimensional drawing	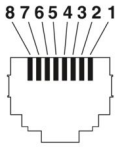 Connector pin assignment plug RJ45
Type	RJ45, straight, PROFINET, EtherCAT®
Signal type/category	PROFINET CAT5 (IEC 11801), 100 Mbps
	EtherCAT® CAT5 (IEC 11801)
Insertion/withdrawal cycles	≥ 750
Insulation resistance	≥ 100 MΩ
Overvoltage category	I
Degree of pollution	2
Material Contact	CuSn
Material Contact surface	Ni/Au
Material Contact carrier	PA
Material Housing	PA
Color (Housing)	black
Flammability rating according to UL 94	V2
Degree of protection	IP20
Ambient temperature (operation)	-25 °C ... 80 °C

Cable/line

Cable length	2 m

PROFINET PVC stranded CAT5 [93B]

Dimensional drawing	
UL AWM Style	21695 (80 °C / 600 V)
Number of positions	4
Shielded	yes
Cable type	PROFINET PVC stranded CAT5 [93B]
Conductor structure	1x4xAWG22/7, SF/TQ
AWG signal line	22
Conductor cross-section	4x 0.34 mm²
Wire diameter incl. insulation	1.5 mm ±0.1 mm
External cable diameter	6.50 mm ±0.2 mm
Outer sheath, material	PVC
External sheath, color	green RAL 6018
Conductor material	Tin-plated Cu litz wires
Material wire insulation	PE
Single wire, color	white, yellow, blue, orange
Overall twist	Star quad
Optical shield covering	85 %
Insulation resistance	≥ 5 GΩ*km
Loop resistance	≤ 120.00 Ω/km
Wave impedance	100 Ω ±5 Ω (at 100 MHz)
Nominal voltage, cable	≤ 600 V
Test voltage Core/Core	2000 V ((50 Hz/1 min))
Test voltage Core/Shield	2000.00 V ((50 Hz/1 min))
Minimum bending radius, fixed installation	4 x D
Minimum bending radius, flexible installation	8 x D
Flame resistance	UL 1581, Section 1060 and UL 2556, Section 9.3 (FT1)
	UL 1685 (CSA FT 4)
	UL 1581, Section 1100 and UL 2556, Section 9.1 (HFT/FT2)
Resistance to oil	OIL RES I according to UL 2256
Other resistance	UV resistant (according to UL 1581, Section 1200)
Ambient temperature (operation)	-40 °C ... 80 °C (cable, fixed installation)
	-10 °C ... 70 °C (Cable, flexible installation)

Drawings

Dimensional drawing

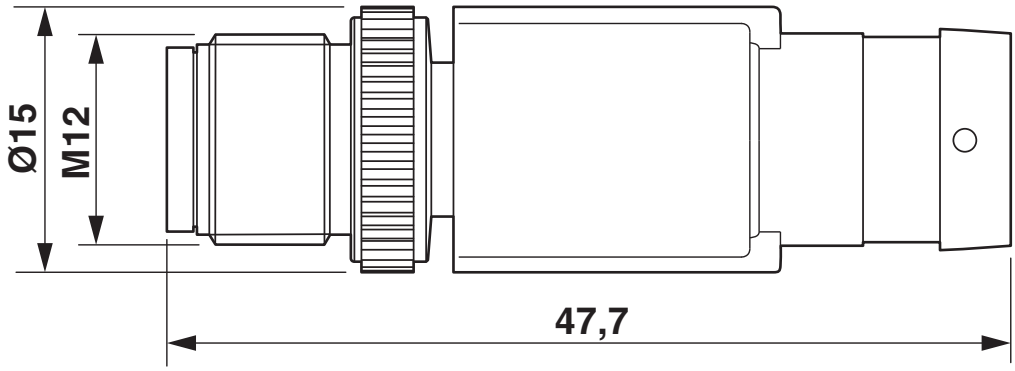

Plug, M12 x 1, straight, shielded

Dimensional drawing

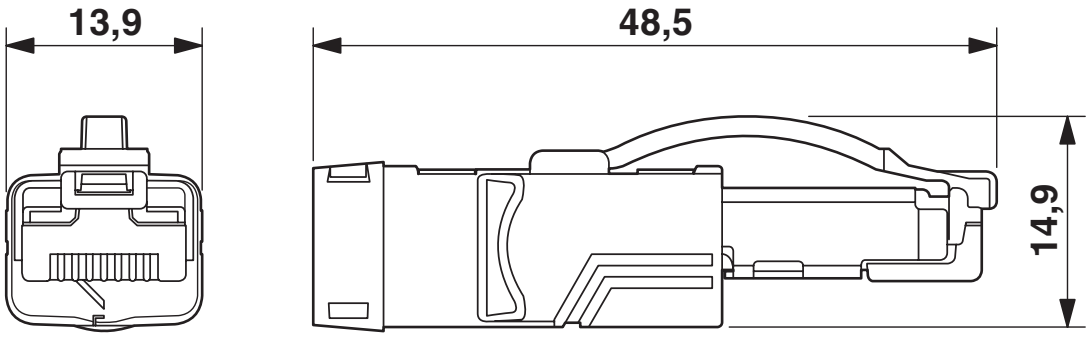

RJ45 connector, IP20

Schematic diagram

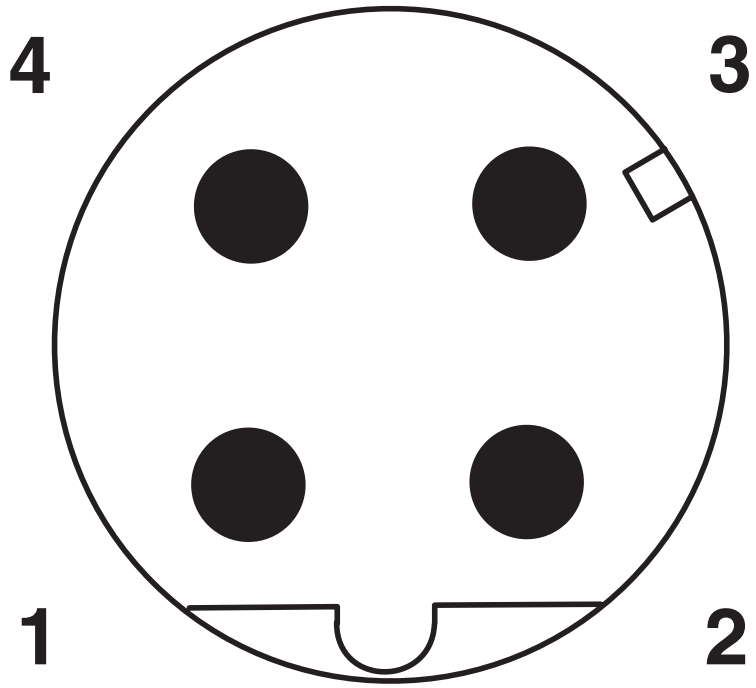

Pin assignment M12 male connector, 4-pos., D-coded, male side

Schematic diagram

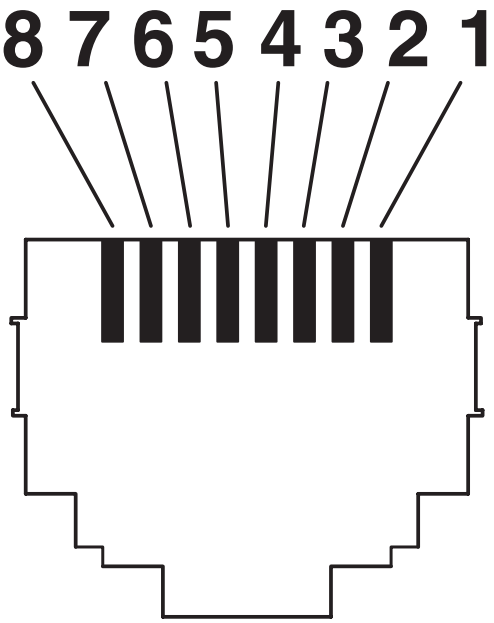

Connector pin assignment plug RJ45

Circuit diagram

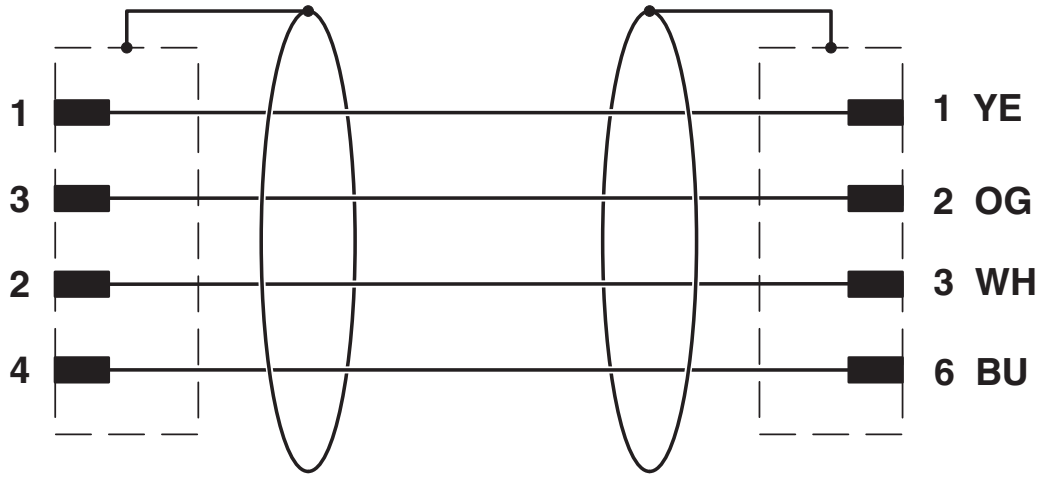

Contact assignment of the M12 and RJ45 plug

Approvals

To download certificates, visit the product detail page: https://www.phoenixcontact.com/us/products/1407500

UL Listed
Approval ID: FILE E 335024

	Nominal voltage U_N	Nominal current I_N	Cross section AWG	Cross section mm^2
keine				
	60 V	0.5 A	-	-

cUL Listed
Approval ID: FILE E 335024

	Nominal voltage U_N	Nominal current I_N	Cross section AWG	Cross section mm^2
keine				
	60 V	0.5 A	-	-

EAC-RoHS
Approval ID: RU D-DE.HB35.B.00387

Classifications

ECLASS

ECLASS-13.0	27060307
ECLASS-15.0	27060307

ETIM

ETIM 10.0	EC002599

UNSPSC

UNSPSC 21.0	26121600

Environmental product compliance

EU RoHS

Fulfills EU RoHS substance requirements	Yes, No exemptions

China RoHS

Environment friendly use period (EFUP)	EFUP-E
	No hazardous substances above the limits

EU REACH SVHC

REACH candidate substance (CAS No.)	No substance above 0.1 wt%

EF3.1 Climate Change

CO2e kg	3.918 kg CO2e

Phoenix Contact 2026 © - all rights reserved
https://www.phoenixcontact.com

Phoenix Contact USA
586 Fulling Mill Road
Middletown, PA 17057, United States
(+717) 944-1300
info@phoenixcon.com