NBC-M 8MS/ 2,0-93B/R4AC - Network cable

1407353

https://www.phoenixcontact.com/us/products/1407353

Please be informed that the data shown in this PDF document is generated from our online catalog. Please find the complete data in the user documentation. Our general terms of use for downloads are valid.



Network cable, Ethernet (100 Mbps), PROFINET (100 Mbps), EtherCAT® (100 Mbps), 4-position, PVC/PVC, green RAL 6018, shielded, Plug straight M8, coding: A / IP67, on Plug straight RJ45 / IP20, cable length: 2 m

Commercial data

Item number	1407353
Packing unit	1 pc
Minimum order quantity	1 pc
Sales key	BF02
Product key	AF1BJI
GTIN	4046356774819
Weight per piece (including packing)	142 g
Weight per piece (excluding packing)	142 g
Customs tariff number	85444290
Country of origin	PL

Technical data

Notes

General	Further products with variable cable type and variable cable length can be found in the accessories section

Product properties

Product type	Data cable preassembled
Application	Standard
Number of positions	4
Shielded	yes
Coding	A

Interfaces

Bus system	Ethernet
Signal type/category	Ethernet, 100 Mbps
	PROFINET, 100 Mbps
	EtherCAT®, 100 Mbps

Signaling

Status display	no
Status display present	no

Electrical properties

Nominal voltage U_N	30 V AC
	30 V DC
Nominal current I_N	1 A
Transmission medium	Copper
Transmission speed	100 Mbps

Connector

Connection 1

Type	Plug straight M8 / IP67
Number of positions	4
Coding type	A (Standard)
Handle color	black
Material	CuSn (Contact)
	Ni/Au (Contact surface)
	TPU GF (Contact carrier)
	TPU, hardly inflammable, self-extinguishing (Grip body)
	Zinc die-cast, nickel-plated (Screw connection)
Insertion/withdrawal cycles	≥ 100
Insulation resistance	≥ 100 MΩ
Tightening torque	0.2 Nm

Degree of protection	IP67
Ambient temperature (operation)	-25 °C ... 90 °C

Connection 2

Dimensional drawing	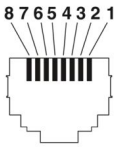 Connector pin assignment plug RJ45
Type	RJ45, straight, PROFINET, EtherCAT®
Signal type/category	PROFINET CAT5 (IEC 11801), 100 Mbps
	EtherCAT® CAT5 (IEC 11801)
Insertion/withdrawal cycles	≥ 750
Insulation resistance	≥ 100 MΩ
Overvoltage category	I
Degree of pollution	2
Material Contact	CuSn
Material Contact surface	Ni/Au
Material Contact carrier	PA
Material Housing	PA
Color (Housing)	black
Flammability rating according to UL 94	V2
Degree of protection	IP20
Ambient temperature (operation)	-25 °C ... 80 °C

Cable/line

Cable length	2 m

PROFINET PVC stranded CAT5 [93B]

Dimensional drawing	
UL AWM Style	21695 (80 °C / 600 V)
Number of positions	4
Shielded	yes
Cable type	PROFINET PVC stranded CAT5 [93B]

Conductor structure	1x4xAWG22/7, SF/TQ
AWG signal line	22
Conductor cross-section	4x 0.34 mm²
Wire diameter incl. insulation	1.5 mm ±0.1 mm
External cable diameter	6.50 mm ±0.2 mm
Outer sheath, material	PVC
External sheath, color	green RAL 6018
Conductor material	Tin-plated Cu litz wires
Material wire insulation	PE
Single wire, color	white, yellow, blue, orange
Overall twist	Star quad
Optical shield covering	85 %
Insulation resistance	≥ 5 GΩ*km
Loop resistance	≤ 120.00 Ω/km
Wave impedance	100 Ω ±5 Ω (at 100 MHz)
Nominal voltage, cable	≤ 600 V
Test voltage Core/Core	2000 V ((50 Hz/1 min))
Test voltage Core/Shield	2000.00 V ((50 Hz/1 min))
Minimum bending radius, fixed installation	4 x D
Minimum bending radius, flexible installation	8 x D
Flame resistance	UL 1581, Section 1060 and UL 2556, Section 9.3 (FT1)
	UL 1685 (CSA FT 4)
	UL 1581, Section 1100 and UL 2556, Section 9.1 (HFT/FT2)
Resistance to oil	OIL RES I according to UL 2256
Other resistance	UV resistant (according to UL 1581, Section 1200)
Ambient temperature (operation)	-40 °C ... 80 °C (cable, fixed installation)
	-10 °C ... 70 °C (Cable, flexible installation)

Environmental and real-life conditions

Ambient conditions

Degree of protection	IP65 (M8 connectors)
	IP67 (M8 connectors)
	IP20 (RJ45 connector)
Ambient temperature (operation) (male connector/female connector)	-25 °C ... 90 °C (M8 connectors)
	-25 °C ... 60 °C (RJ45 connector)

Standards and regulations

M8

Standard designation	M8 connector
Standards/specifications	IEC 61076-2-104

Drawings

Dimensional drawing

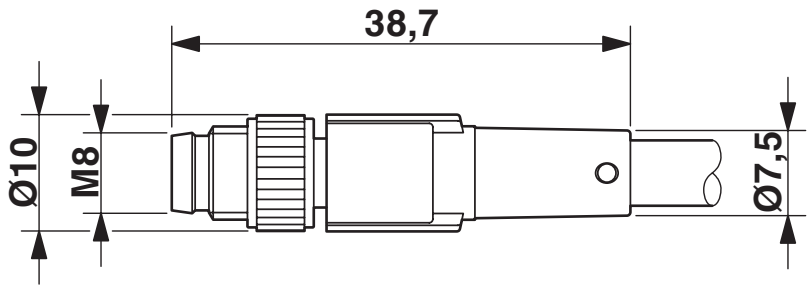

M8 x 1 male plug, straight version

Dimensional drawing

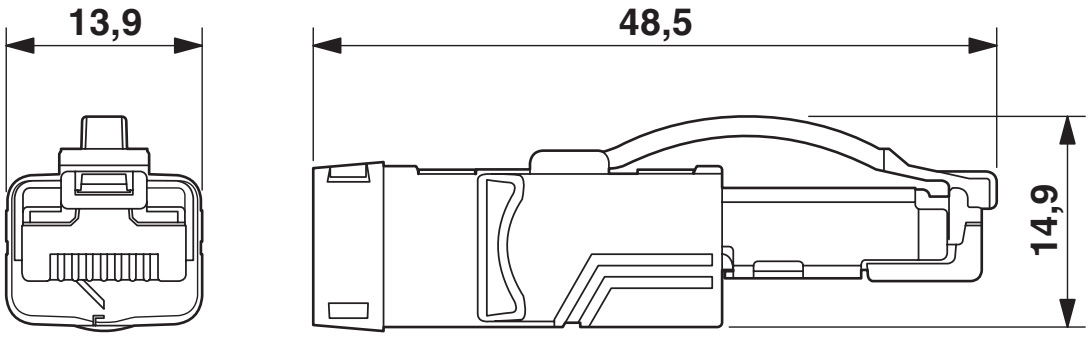

RJ45 connector, IP20

Schematic diagram

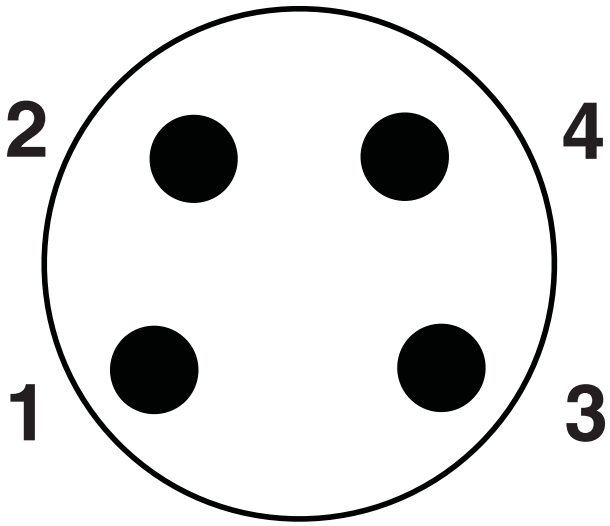

Pin assignment M8 plug, 4-pos., view male side

Schematic diagram

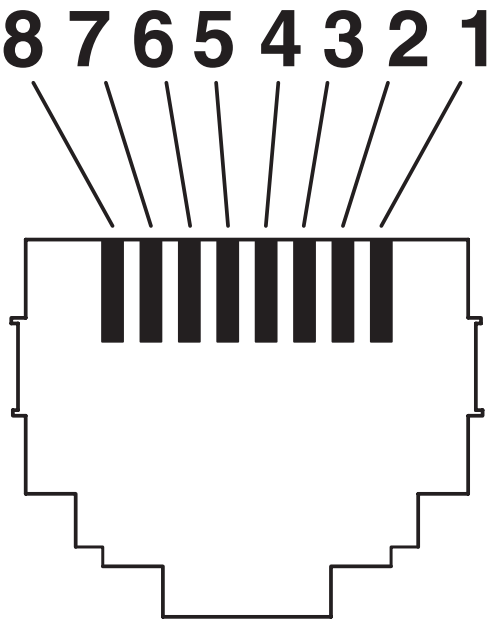

Connector pin assignment plug RJ45

Circuit diagram



Contact assignment of the M8 and RJ45 plug

Approvals

To download certificates, visit the product detail page: https://www.phoenixcontact.com/us/products/1407353

EAC-RoHS
Approval ID: RU D-DE.HB35.B.00387

Classifications

ECLASS

ECLASS-13.0	27060307
ECLASS-15.0	27060307

ETIM

ETIM 10.0	EC002599

UNSPSC

UNSPSC 21.0	26121600

Environmental product compliance

EU RoHS

Fulfills EU RoHS substance requirements	Yes, No exemptions

China RoHS

Environment friendly use period (EFUP)	EFUP-E
	No hazardous substances above the limits

EU REACH SVHC

REACH candidate substance (CAS No.)	No substance above 0.1 wt%

Phoenix Contact 2026 © - all rights reserved
https://www.phoenixcontact.com

Phoenix Contact USA
586 Fulling Mill Road
Middletown, PA 17057, United States
(+717) 944-1300
info@phoenixcon.com