SAC-5P- 5,0-28R/FR SCO RAIL - Sensor/actuator cable

1407335

https://www.phoenixcontact.com/us/products/1407335

Please be informed that the data shown in this PDF document is generated from our online catalog. Please find the complete data in the user documentation. Our general terms of use for downloads are valid.



Sensor/actuator cable, 5-position, PE-X halogen-free, black, shielded, free cable end, on Socket angled M12 SPEEDCON, coding: A, cable length: 5 m, For railway applications

Your advantages

- Easy and safe: 100 % electrically tested plug-in components
- Securely locked by special vibration brake
- Resistant to temperature influences – tested for an extended temperature range and for resistance to temperature shocks
- Reliable signal transmission – 360° shielding in environments with electromagnetic interference

Commercial data

Item number	1407335
Packing unit	1 pc
Minimum order quantity	1 pc
Sales key	BF03
Product key	AF1CDA
GTIN	4046356774512
Weight per piece (including packing)	369.7 g
Weight per piece (excluding packing)	376 g
Customs tariff number	85444290
Country of origin	PL

Technical data

Notes

General	Further products with variable cable type and variable cable length can be found in the accessories section

Product properties

Product type	Sensor/actuator cable
Application	Railway applications
Number of positions	5
No. of cable outlets	1
Shielded	yes
Coding	A

Insulation characteristics

Overvoltage category	II
Degree of pollution	3

Material specifications

Flammability rating according to UL 94	V0
Seal material	NBR
Material of grip body	PA 6.6
Contact material	CuSn
Contact surface material	Ni/Au
Contact carrier material	PA 6.6
Material for screw connection	Zinc die-cast, nickel-plated

Electrical properties

Insulation resistance	≥ 100 MΩ
Nominal voltage U_N	48 V AC
	60 V DC
Nominal current I_N	4 A

Mechanical properties

Mechanical data

Insertion/withdrawal cycles	≥ 100

Signaling

Status display	no
Status display present	no

Connection data

Conductor connection

Tightening torque	0.4 Nm (M12 connector)

Connector

Connection 1

Type	free cable end

Connection 2

Type	Socket angled M12 SPEEDCON
Number of positions	5
Locking type	SPEEDCON
Coding type	A

Cable/line

Cable length	5 m

Shielded black RADOX® [28R]

Dimensional drawing	
Cable weight	70 kg/km
Number of positions	5
Shielded	yes
Cable type	Shielded black RADOX® [28R]
Conductor structure signal line	19x 0.18 mm
AWG signal line	20
Conductor cross-section	5x 0.5 mm²
Wire diameter incl. insulation	1.43 mm
External cable diameter	6.20 mm ±0.3 mm
Outer sheath, material	PE-X
External sheath, color	black
Conductor material	Tin-plated Cu litz wires
Material wire insulation	PE-X
Single wire, color	white 1, white 2, white 3, white 4, white 5
Overall twist	5 cores, twisted
Max. conductor resistance	≤ 40.1 Ω/km
Nominal voltage, cable	600 V AC (Core-ground, U_0)
	1000 V AC (Core-ground, U)
	≤ 720 V AC (core-ground)
	≤ 1200 V AC (Core-ground, U_m)
	≤ 900 V DC (Core-ground, V_0)

	≤ 1500 V DC (Line-line)
Test voltage	3500 V AC (50 Hz, 5 min.)
	8400 V DC (50 Hz, 5 min.)
Minimum bending radius, fixed installation	3 x D
Minimum bending radius, flexible installation	4 x D
Smallest bending radius, fixed installation	19 mm
Smallest bending radius, movable installation	25 mm
Halogen-free	in accordance with EN 50267-2-1
Flame resistance	IEC 60332-1-2
	EN 50266
	EN 60332-3-25
	NF C32-070, 2.1
	NF C32-070, 2.2
	UL 1685, 12 (FT4)
	in accordance with ISO 6722-1 5.22 (UN ECE-R 118.01)
Fume corrosiveness	EN 50267-2-2
Fume toxicity	BS 6853 B.1
	EN 50305, 9.2
Concentration of fumes	BS 6853 D.8.7
	EN 61034-2
	UL 1685, 12 (FT4)
Resistance to oil	according to IRM 902, 72 h at 100 °C
Fire protection in rail vehicles	BS 6853 (Category Ia, Ib, II)
	GM/RT 2130 (Category Ia, Ib, II)
	EN 45545 (Risk level HL1 - HL3)
	DIN 5510 (Fire protection level 1, 2, 3, 4)
	NF F16-101 (Category A1, A2, B)
	NF F16-101 (Class C/F0)
	NFPA 130
	UNI CEI 11170 (Risk level LR1 - LR4)
Other resistance	Resistance to fuels (according to IRM 903, 168 h at 70 °C)
Ambient temperature (operation)	-50 °C ... 120 °C (cable, fixed installation)
	-25 °C ... 90 °C (Cable, flexible installation)

Environmental and real-life conditions

Ambient conditions

Degree of protection	IP65
Ambient temperature (operation) (male connector/female connector)	-40 °C ... 85 °C (Plug / socket)

Standards and regulations

M12

Standard designation	M12 connector

Standards/specifications	IEC 61076-2-101
Standard designation	Shock, vibration
Standards/specifications	EN 50155

Drawings

Dimensional drawing

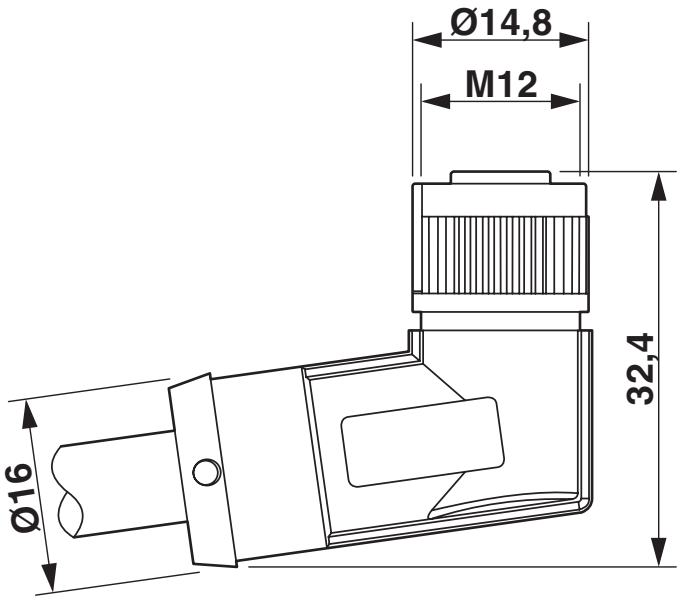

Socket M12-SPEEDCON, angled, shielded

Schematic diagram

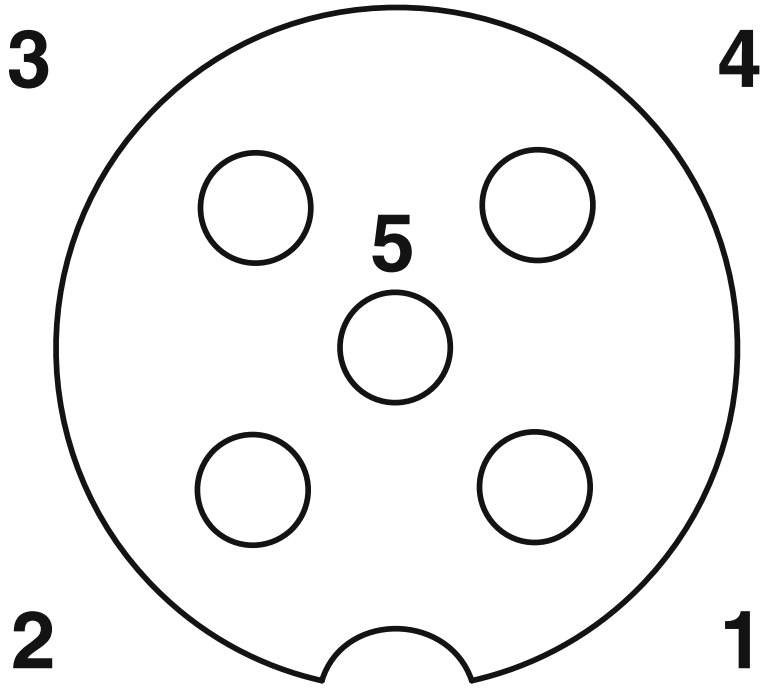

Pin assignment M12 socket, 5-pos., A-coded, socket side view

Circuit diagram

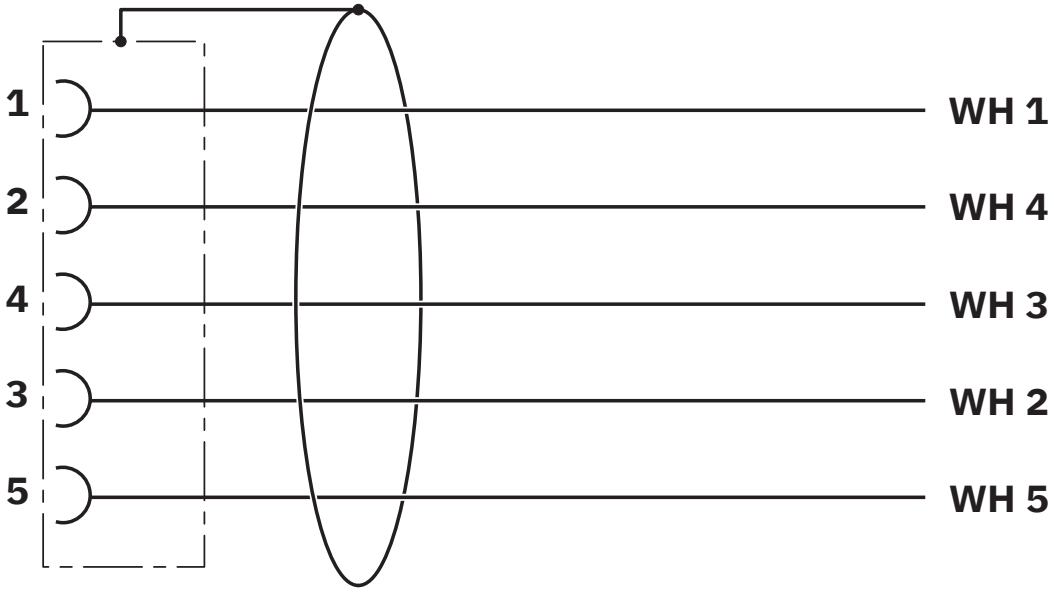

Contact assignment of the M12 socket

Approvals

To download certificates, visit the product detail page: https://www.phoenixcontact.com/us/products/1407335

EAC-RoHS
Approval ID: RU D-DE.HB35.B.00387

Classifications

ECLASS

ECLASS-13.0	27060311
ECLASS-15.0	27060311

ETIM

ETIM 10.0	EC001855

UNSPSC

UNSPSC 21.0	26121600

Environmental product compliance

EU RoHS

Fulfills EU RoHS substance requirements	Yes, No exemptions

China RoHS

Environment friendly use period (EFUP)	EFUP-E
	No hazardous substances above the limits

EU REACH SVHC

REACH candidate substance (CAS No.)	6,6'-di-tert-butyl-2,2'-methylenedi-p-cresol(CAS: 119-47-1)
SCIP	f3622d19-78f7-427b-86bd-f7012d18697b

EF3.1 Climate Change

CO2e kg	2.709 kg CO2e

Phoenix Contact 2026 © - all rights reserved
https://www.phoenixcontact.com

Phoenix Contact USA
586 Fulling Mill Road
Middletown, PA 17057, United States
(+717) 944-1300
info@phoenixcon.com